chanhvinh.com



# Rubber Endstop Buffers • truncated cone form

## EH 25150.



## Product Description

To be used as an elastic end-stop, bearing foot etc.
The hardness is 55 ±5° Shore A. Further shore hardnesses (40 ±5° Shore A and 70 ±5° Shore A) on request.

### Material

**Support washer**
- Steel, zinc-plated by galvanization, passivated
- Stainless steel 1.4301

**Threaded bushing**
- Steel, zinc-plated by galvanization, passivated
- Stainless steel 1.4301

**Body**
- NBR

**Screw**
- Steel, zinc-plated by galvanization, passivated
- Stainless steel 1.4301

**More information**

### Further products

- Support Legs, impact cushioning
- Silicone Endstop Buffers, truncated cone form

## Drawing

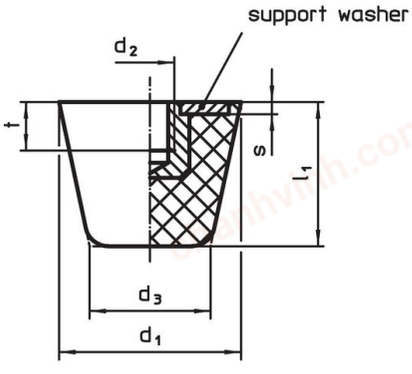


picture 1

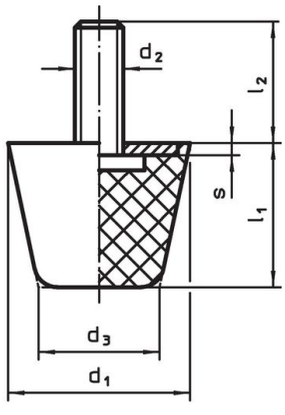


picture 2

## Order information

| Dimensions | | | | | | | Spring rate R ~ | Load capacity max. | Spring range ~ | Temperature | | Weight | Art. No. |
|---|---|---|---|---|---|---|---|---|---|---|---|---|---|
| $d_1$ | $d_2$ | $l_2$ | $d_3$ | $l_1$ | s | t ~ | | | | min. | max. | | |
| [mm] | | | | | | | [N/mm] | [N] | [mm] | [°C] | | [g] | |
| **with female thread – picture 1, Steel** | | | | | | | | | | | | | |
| **19** | **M 5** | – | 12.0 | 16.0 | 2 | 5 | 28 | 110 | 4.00 | -30 | 80 | 7.2 | 25150.0719 |
| **25** | **M 6** | – | 16.5 | 20.5 | 2 | 6 | 82 | 430 | 5.25 | -30 | 80 | 14.0 | 25150.0725 |
| **32** | **M 8** | – | 21.0 | 26.0 | 2 | 8 | 140 | 910 | 6.50 | -30 | 80 | 27.0 | 25150.0732 |
| **38** | **M 8** | – | 24.5 | 32.0 | 2 | 8 | 125 | 1200 | 9.50 | -30 | 80 | 43.0 | 25150.0738 |
| **50** | **M10** | – | 32.0 | 43.0 | 2 | 10 | 155 | 1620 | 10.50 | -30 | 80 | 93.0 | 25150.0750 |
| **with female thread – picture 1, Stainless steel** | | | | | | | | | | | | | |
| **19** | **M 5** | – | 12.0 | 16.0 | 2 | 5 | 28 | 110 | 4.00 | -30 | 80 | 6.2 | 25150.0919 |
| **25** | **M 6** | – | 16.5 | 20.5 | 2 | 6 | 82 | 430 | 5.25 | -30 | 80 | 13.0 | 25150.0925 |
| **32** | **M 8** | – | 21.0 | 26.0 | 2 | 8 | 140 | 910 | 6.50 | -30 | 80 | 24.0 | 25150.0932 |
| **38** | **M 8** | – | 24.5 | 32.0 | 2 | 8 | 125 | 1200 | 9.50 | -30 | 80 | 40.0 | 25150.0938 |
| **50** | **M10** | – | 32.0 | 43.0 | 2 | 10 | 155 | 1620 | 10.50 | -30 | 80 | 96.0 | 25150.0950 |

chanhvinh.com



| Dimensions | | | | | | | Spring rate R ~ | Load capacity max. | Spring range ~ | min. | max. | | Art. No. |
|---|---|---|---|---|---|---|---|---|---|---|---|---|---|
| $d_1$ | $d_2$ | $l_2$ | $d_3$ | $l_1$ | s | t ~ | | | | | | | |
| [mm] | | | | | | | [N/mm] | [N] | [mm] | [°C] | | [g] | |
| **with screw – picture 2, Steel** | | | | | | | | | | | | | |
| **19** | **M 5** | **6** | 12.0 | 16.0 | 2 | – | 28 | 110 | 4.00 | -30 | 80 | 8.0 | **25150.0819** |
| **19** | **M 5** | **10** | 12.0 | 16.0 | 2 | – | 28 | 110 | 4.00 | -30 | 80 | 8.3 | **25150.0820** |
| **19** | **M 5** | **20** | 12.0 | 16.0 | 2 | – | 28 | 110 | 4.00 | -30 | 80 | 8.7 | **25150.0821** |
| **25** | **M 6** | **8** | 16.5 | 20.5 | 2 | – | 82 | 430 | 5.25 | -30 | 80 | 16.0 | **25150.0825** |
| **25** | **M 6** | **12** | 16.5 | 20.5 | 2 | – | 82 | 430 | 5.25 | -30 | 80 | 17.0 | **25150.0826** |
| **25** | **M 6** | **25** | 16.5 | 20.5 | 2 | – | 82 | 430 | 5.25 | -30 | 80 | 19.0 | **25150.0827** |
| **32** | **M 8** | **10** | 21.0 | 26.0 | 2 | – | 140 | 910 | 6.50 | -30 | 80 | 30.0 | **25150.0832** |
| **32** | **M 8** | **16** | 21.0 | 26.0 | 2 | – | 140 | 910 | 6.50 | -30 | 80 | 32.0 | **25150.0833** |
| **32** | **M 8** | **30** | 21.0 | 26.0 | 2 | – | 140 | 910 | 6.50 | -30 | 80 | 36.0 | **25150.0834** |
| **38** | **M 8** | **10** | 24.5 | 32.0 | 2 | – | 125 | 1200 | 9.50 | -30 | 80 | 47.0 | **25150.0838** |
| **38** | **M 8** | **16** | 24.5 | 32.0 | 2 | – | 125 | 1200 | 9.50 | -30 | 80 | 48.0 | **25150.0839** |
| **38** | **M 8** | **30** | 24.5 | 32.0 | 2 | – | 125 | 1200 | 9.50 | -30 | 80 | 52.0 | **25150.0840** |
| **50** | **M10** | **12** | 32.0 | 43.0 | 2 | – | 155 | 1620 | 10.50 | -30 | 80 | 101.0 | **25150.0850** |
| **50** | **M10** | **20** | 32.0 | 43.0 | 2 | – | 155 | 1620 | 10.50 | -30 | 80 | 104.0 | **25150.0851** |
| **50** | **M10** | **40** | 32.0 | 43.0 | 2 | – | 155 | 1620 | 10.50 | -30 | 80 | 112.0 | **25150.0852** |
| **with screw – picture 2, Stainless steel** | | | | | | | | | | | | | |
| **19** | **M 5** | **6** | 12.0 | 16.0 | 2 | – | 28 | 110 | 4.00 | -30 | 80 | 7.7 | **25150.1019** |
| **19** | **M 5** | **10** | 12.0 | 16.0 | 2 | – | 28 | 110 | 4.00 | -30 | 80 | 8.2 | **25150.1020** |
| **19** | **M 5** | **20** | 12.0 | 16.0 | 2 | – | 28 | 110 | 4.00 | -30 | 80 | 9.3 | **25150.1021** |
| **25** | **M 6** | **8** | 16.5 | 20.5 | 2 | – | 82 | 430 | 5.25 | -30 | 80 | 16.0 | **25150.1025** |
| **25** | **M 6** | **12** | 16.5 | 20.5 | 2 | – | 82 | 430 | 5.25 | -30 | 80 | 17.0 | **25150.1026** |
| **25** | **M 6** | **25** | 16.5 | 20.5 | 2 | – | 82 | 430 | 5.25 | -30 | 80 | 19.0 | **25150.1027** |
| **32** | **M 8** | **10** | 21.0 | 26.0 | 2 | – | 140 | 910 | 6.50 | -30 | 80 | 32.0 | **25150.1032** |
| **32** | **M 8** | **16** | 21.0 | 26.0 | 2 | – | 140 | 910 | 6.50 | -30 | 80 | 33.0 | **25150.1033** |
| **32** | **M 8** | **30** | 21.0 | 26.0 | 2 | – | 140 | 910 | 6.50 | -30 | 80 | 37.0 | **25150.1034** |
| **38** | **M 8** | **10** | 24.5 | 32.0 | 2 | – | 125 | 1200 | 9.50 | -30 | 80 | 46.0 | **25150.1038** |
| **38** | **M 8** | **16** | 24.5 | 32.0 | 2 | – | 125 | 1200 | 9.50 | -30 | 80 | 49.0 | **25150.1039** |
| **38** | **M 8** | **30** | 24.5 | 32.0 | 2 | – | 125 | 1200 | 9.50 | -30 | 80 | 53.0 | **25150.1040** |
| **50** | **M10** | **12** | 32.0 | 43.0 | 2 | – | 155 | 1620 | 10.50 | -30 | 80 | 99.0 | **25150.1050** |
| **50** | **M10** | **20** | 32.0 | 43.0 | 2 | – | 155 | 1620 | 10.50 | -30 | 80 | 100.0 | **25150.1051** |
| **50** | **M10** | **40** | 32.0 | 43.0 | 2 | – | 155 | 1620 | 10.50 | -30 | 80 | 111.0 | **25150.1052** |

## Compliance

For detailed compliance information please select the desired article number.