chanhvinh.com

Rubber Endstop Buffers • parabolic

EH 25150.



Product Description

To be used as an elastic end-stop.
Due to the parabolic form the absorption is first soft and raises progressively.
The hardness is 55 ±5° Shore A. Further shore hardnesses (40 ±5° Shore A and 70 ±5° Shore A) on request.

Material

Support washer
- Steel, zinc-plated, blue chromated

Threaded bushing
- Steel, zinc-plated, blue chromated

Body
- Rubber natural caoutchouc (NR), black

Screw
- Steel, zinc-plated, blue chromated

More information

Further products

- Support Legs, impact cushioning

Drawing

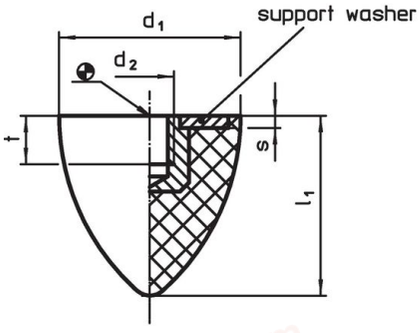

picture 1

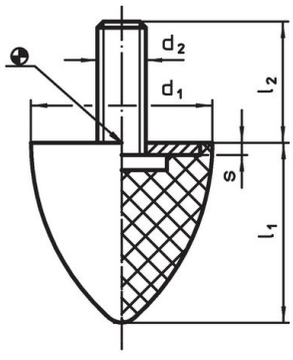

picture 2

Order information

Dimensions						Average spring range ~	Load capacity max.	Spring range ~	min.	max.		Art. No.
d_1 ±1.5	l_1 ±1.5	d_2	l_2	s	t ~							
[mm]						[N/mm]	[N]	[mm]	[°C]		[g]	
with female thread – picture 1												
20	**24**	M 6	–	2	5.0	16.6	100	6.00	-30	80	11	25150.0522
30	**30**	M 8	–	2	6.5	24.0	150	6.25	-30	80	23	25150.0532
30	**36**	M 8	–	2	6.5	26.6	200	7.50	-30	80	26	25150.0533
35	**40**	M 8	–	2	6.5	65.0	650	10.00	-30	80	40	25150.0537
50	**61**	M 8	–	2	6.5	50.0	750	15.00	-30	80	110	25150.0552
50	**68**	M10	–	2	7.0	50.0	850	17.00	-30	80	120	25150.0553
with screw – picture 2												
20	**24**	M 6	18	2	–	16.6	100	6.00	-30	80	11	25150.0622
30	**30**	M 8	18	2	–	24.0	150	6.25	-30	80	29	25150.0632
30	**36**	M 8	20	2	–	26.6	200	7.50	-30	80	33	25150.0633
35	**40**	M 8	23	2	–	65.0	650	10.00	-30	80	56	25150.0637
50	**61**	M 8	28	2	–	50.0	750	15.00	-30	80	114	25150.0652
50	**68**	M10	28	2	–	50.0	850	17.00	-30	80	136	25150.0653

chanhvinh.com

Application example

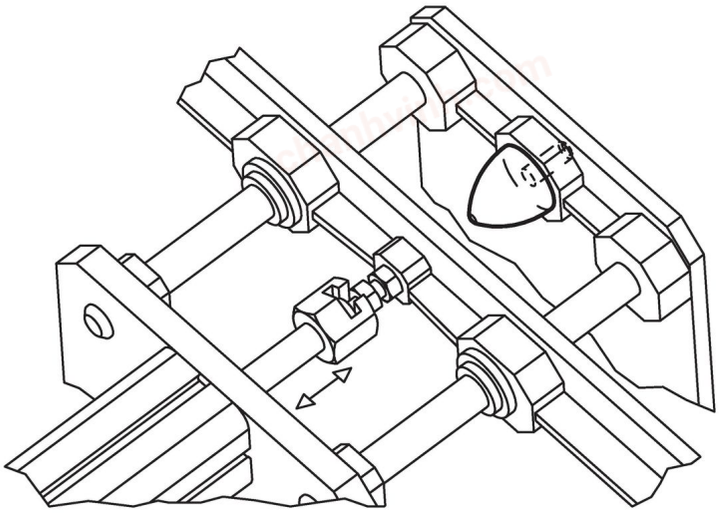

Compliance

For detailed compliance information please select the desired article number.