chanhvinh.com

Rubber Endstop Buffers • cylindrical

EH 25150.



Product Description

To be used as an elastic end-stop, bearing foot etc.
The hardness is 55 ±5° Shore A. Further shore hardnesses (40 ±5° Shore A and 70 ±5° Shore A) on request.

Material

Support washer
- Steel, zinc-plated, blue chromated
- Stainless steel 1.4301

Threaded bushing
- Steel, zinc-plated, blue chromated
- Stainless steel 1.4301

Body
- Rubber natural caoutchouc (NR), black

Screw
- Steel, zinc-plated, blue chromated
- Stainless steel 1.4301

More information

Further products

- Support Legs, impact cushioning

Drawing

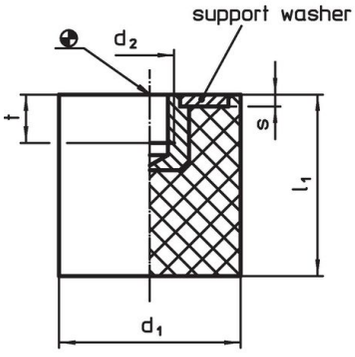

picture 1

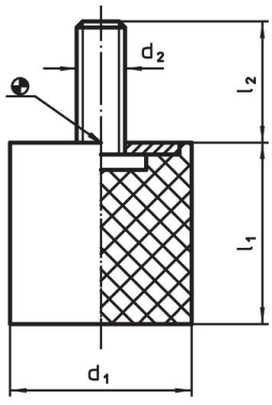

picture 2

Order information

Dimensions						Spring rate R ~	Load capacity max.	Spring range ~	min.	max.		Art. No.
d_1	l_1	d_2	l_2	s	t ~							
[mm]						[N/mm]	[N]	[mm]	[°C]		[g]	
with female thread – picture 1, Steel												
10	**10**	M 4	–	1.2	4.0	24	59	2.50	-30	80	1.7	25150.0306
15	**15**	M 4	–	1.4	4.0	64	241	3.75	-30	80	4.6	25150.0309
15	**20**	M 4	–	1.4	4.0	57	287	5.00	-30	80	5.7	25150.0310
20	**15**	M 6	–	2.0	5.0	77	289	3.75	-30	80	10.0	25150.0321
20	**20**	M 6	–	2.0	5.0	60	302	5.00	-30	80	10.0	25150.0322
20	**25**	M 6	–	2.0	5.0	48	297	6.25	-30	80	13.0	25150.0323
25	**15**	M 6	–	2.0	5.0	163	612	3.75	-30	80	14.0	25150.0326
25	**20**	M 6	–	2.0	5.0	112	560	5.00	-30	80	15.0	25150.0327
25	**30**	M 6	–	2.0	5.0	68	509	7.50	-30	80	20.0	25150.0328
30	**15**	M 8	–	2.0	6.5	294	934	3.75	-30	80	21.0	25150.0331
30	**20**	M 8	–	2.0	6.5	185	924	5.00	-30	80	30.0	25150.0332
30	**30**	M 8	–	2.0	6.5	117	876	7.50	-30	80	30.0	25150.0333
40	**20**	M 8	–	2.0	6.5	247	1235	5.00	-30	80	50.0	25150.0341
40	**30**	M 8	–	2.0	6.5	213	1600	7.50	-30	80	55.0	25150.0342
40	**40**	M 8	–	2.0	6.5	182	1820	10.00	-30	80	80.0	25150.0343
50	**20**	M10	–	2.0	7.0	517	2587	5.00	-30	80	80.0	25150.0351

Dimensions						Spring rate R ~	Load capacity max.	Spring range ~	min.	max.		Art. No.
d_1	l_1	d_2	l_2	s	t ~							
[mm]						[N/mm]	[N]	[mm]	[°C]		[g]	
50	**30**	M10	–	2.0	7.0	327	2453	7.50	-30	80	100.0	25150.0352
50	**40**	M10	–	2.0	7.0	247	2468	10.00	-30	80	120.0	25150.0353
60	**30**	M10	–	2.0	7.0	467	3500	7.50	-30	80	140.0	25150.0361
60	**50**	M10	–	2.0	7.0	269	3367	12.50	-30	80	210.0	25150.0362
70	**40**	M10	–	3.0	7.0	410	4100	10.00	-30	80	260.0	25150.0371
70	**55**	M10	–	3.0	7.0	327	4500	13.75	-30	80	340.0	25150.0372
75	**30**	M12	–	3.0	9.0	600	4500	7.50	-30	80	210.0	25150.0376
75	**40**	M12	–	3.0	9.0	450	4500	10.00	-30	80	290.0	25150.0377
75	**50**	M12	–	3.0	9.0	352	4400	12.50	-30	80	350.0	25150.0378
100	**40**	M16	–	3.0	16.0	810	8100	10.00	-30	80	514.0	25150.0382
100	**50**	M16	–	3.0	16.0	640	8000	12.50	-30	80	512.0	25150.0384
100	**60**	M16	–	3.0	16.0	520	7800	15.00	-30	80	698.0	25150.0386
with screw – picture 2, Steel												
8	**8**	M 3	6	1.0	–	20	40	2.00	-30	80	1.0	25150.0403
10	**10**	M 4	10	1.2	–	24	59	2.50	-30	80	1.9	25150.0406
10	**15**	M 4	10	1.2	–	21	78	3.75	-30	80	2.4	25150.0407
15	**10**	M 4	10	1.4	–	77	154	2.00	-30	80	4.0	25150.0408
15	**15**	M 4	10	1.4	–	64	241	3.75	-30	80	5.0	25150.0409
15	**20**	M 4	10	1.4	–	57	287	5.00	-30	80	6.2	25150.0410
15	**30**	M 4	10	1.4	–	48	300	6.25	-30	80	8.0	25150.0411
20	**10**	M 6	18	2.0	–	126	315	2.50	-30	80	9.3	25150.0421
20	**15**	M 6	18	2.0	–	77	289	3.75	-30	80	10.0	25150.0422
20	**20**	M 6	18	2.0	–	60	302	5.00	-30	80	13.0	25150.0423
20	**30**	M 6	18	2.0	–	38	285	7.50	-30	80	16.0	25150.0424
25	**15**	M 6	18	2.0	–	163	612	3.75	-30	80	18.0	25150.0426
25	**20**	M 6	18	2.0	–	112	560	5.00	-30	80	20.0	25150.0427
25	**30**	M 6	18	2.0	–	68	509	7.50	-30	80	25.0	25150.0428
30	**15**	M 8	20	2.0	–	294	934	3.75	-30	80	28.0	25150.0431
30	**20**	M 8	20	2.0	–	185	924	5.00	-30	80	32.0	25150.0432
30	**25**	M 8	20	2.0	–	130	815	6.25	-30	80	38.0	25150.0433
30	**30**	M 8	20	2.0	–	117	876	7.50	-30	80	43.0	25150.0434
40	**20**	M 8	23	2.0	–	247	1235	5.00	-30	80	55.0	25150.0441
40	**25**	M 8	23	2.0	–	247	1546	6.25	-30	80	60.0	25150.0442
40	**30**	M 8	23	2.0	–	213	1600	7.50	-30	80	73.0	25150.0443
40	**40**	M 8	23	2.0	–	182	1820	10.00	-30	80	83.0	25150.0444
50	**20**	M10	28	2.0	–	517	2587	5.00	-30	80	90.0	25150.0451
50	**30**	M10	28	2.0	–	327	2453	7.50	-30	80	118.0	25150.0452
50	**40**	M10	28	2.0	–	247	2468	10.00	-30	80	131.0	25150.0453
60	**20**	M10	28	2.0	–	726	3630	5.00	-30	80	110.0	25150.0461
60	**40**	M10	28	2.0	–	340	3400	10.00	-30	80	195.0	25150.0462
70	**40**	M10	27	3.0	–	410	4100	10.00	-30	80	265.0	25150.0471
70	**55**	M10	27	3.0	–	327	4500	13.75	-30	80	357.0	25150.0472
75	**25**	M12	37	3.0	–	752	4700	6.25	-30	80	223.0	25150.0476
75	**40**	M12	37	3.0	–	450	4500	10.00	-30	80	310.0	25150.0477
75	**50**	M12	37	3.0	–	352	4400	12.50	-30	80	340.0	25150.0478
100	**40**	M16	41	3.0	–	810	8100	10.00	-30	80	570.0	25150.0482
100	**50**	M16	41	3.0	–	640	8000	12.50	-30	80	634.0	25150.0484
100	**60**	M16	41	3.0	–	520	7800	15.00	-30	80	750.0	25150.0486
with female thread – picture 1, Stainless steel												
10	**10**	M 4	–	1.2	4.0	24	59	2.50	-30	80	1.4	25150.1306
15	**15**	M 4	–	1.4	4.0	64	241	3.75	-30	80	4.5	25150.1309
15	**20**	M 4	–	1.4	4.0	57	287	5.00	-30	80	5.8	25150.1310
20	**15**	M 6	–	2.0	5.0	77	289	3.75	-30	80	8.1	25150.1321
20	**20**	M 6	–	2.0	5.0	60	302	5.00	-30	80	9.8	25150.1322
20	**25**	M 6	–	2.0	5.0	48	297	6.25	-30	80	12.0	25150.1323
25	**15**	M 6	–	2.0	5.0	163	612	3.75	-30	80	13.0	25150.1326
25	**20**	M 6	–	2.0	5.0	112	560	5.00	-30	80	16.0	25150.1327
25	**30**	M 6	–	2.0	5.0	68	509	7.50	-30	80	22.0	25150.1328
30	**15**	M 8	–	2.0	6.5	294	934	3.75	-30	80	19.0	25150.1331
30	**20**	M 8	–	2.0	6.5	185	924	5.00	-30	80	23.0	25150.1332
30	**30**	M 8	–	2.0	6.5	117	876	7.50	-30	80	31.0	25150.1333

Dimensions						Spring rate R ~	Load capacity max.	Spring range ~	min.	max.		Art. No.
d_1	l_1	d_2	l_2	s	t ~							
[mm]						[N/mm]	[N]	[mm]	[°C]		[g]	
40	**20**	M 8	–	2.0	6.5	247	1235	5.00	-30	80	41.0	25150.1341
40	**30**	M 8	–	2.0	6.5	213	1600	7.50	-30	80	54.0	25150.1342
40	**40**	M 8	–	2.0	6.5	182	1820	10.00	-30	80	69.0	25150.1343
50	**20**	M10	–	2.0	7.0	517	2587	5.00	-30	80	75.0	25150.1351
50	**30**	M10	–	2.0	7.0	327	2453	7.50	-30	80	98.0	25150.1352
50	**40**	M10	–	2.0	7.0	247	2468	10.00	-30	80	118.0	25150.1353
60	**30**	M10	–	2.0	7.0	467	3500	7.50	-30	80	139.0	25150.1361
60	**50**	M10	–	2.0	7.0	269	3367	12.50	-30	80	206.0	25150.1362
70	**40**	M10	–	3.0	7.0	410	4100	10.00	-30	80	234.0	25150.1371
70	**55**	M10	–	3.0	7.0	327	4500	13.75	-30	80	295.0	25150.1372
75	**30**	M12	–	3.0	9.0	600	4500	7.50	-30	80	201.0	25150.1376
75	**40**	M12	–	3.0	9.0	450	4500	10.00	-30	80	261.0	25150.1377
75	**50**	M12	–	3.0	9.0	352	4400	12.50	-30	80	312.0	25150.1378
100	**40**	M16	–	3.0	16.0	810	8100	10.00	-30	80	513.0	25150.1382
100	**50**	M16	–	3.0	16.0	640	8000	12.50	-30	80	607.0	25150.1384
100	**60**	M16	–	3.0	16.0	520	7800	15.00	-30	80	695.0	25150.1386
with screw – picture 2, Stainless steel												
8	**8**	M 3	6	1.0	–	20	40	2.00	-30	80	1.0	25150.1403
10	**10**	M 4	10	1.2	–	24	59	2.50	-30	80	2.0	25150.1406
10	**15**	M 4	10	1.2	–	21	78	3.75	-30	80	2.6	25150.1407
15	**10**	M 4	10	1.4	–	77	154	2.00	-30	80	5.0	25150.1408
15	**15**	M 4	10	1.4	–	64	241	3.75	-30	80	6.0	25150.1409
15	**20**	M 4	10	1.4	–	57	287	5.00	-30	80	7.0	25150.1410
15	**30**	M 4	10	1.4	–	48	300	6.25	-30	80	9.0	25150.1411
20	**10**	M 6	18	2.0	–	126	315	2.50	-30	80	12.0	25150.1421
20	**15**	M 6	18	2.0	–	77	289	3.75	-30	80	13.0	25150.1422
20	**20**	M 6	18	2.0	–	60	302	5.00	-30	80	16.0	25150.1423
20	**30**	M 6	18	2.0	–	38	285	7.50	-30	80	19.0	25150.1424
25	**15**	M 6	18	2.0	–	163	612	3.75	-30	80	19.0	25150.1426
25	**20**	M 6	18	2.0	–	112	560	5.00	-30	80	21.0	25150.1427
25	**30**	M 6	18	2.0	–	68	509	7.50	-30	80	27.0	25150.1428
30	**15**	M 8	20	2.0	–	294	934	3.75	-30	80	30.0	25150.1431
30	**20**	M 8	20	2.0	–	185	924	5.00	-30	80	34.0	25150.1432
30	**25**	M 8	20	2.0	–	130	815	6.25	-30	80	38.0	25150.1433
30	**30**	M 8	20	2.0	–	117	876	7.50	-30	80	42.0	25150.1434
40	**20**	M 8	23	2.0	–	247	1235	5.00	-30	80	53.0	25150.1441
40	**25**	M 8	23	2.0	–	247	1546	6.25	-30	80	60.0	25150.1442
40	**30**	M 8	23	2.0	–	213	1600	7.50	-30	80	66.0	25150.1443
40	**40**	M 8	23	2.0	–	182	1820	10.00	-30	80	78.0	25150.1444
50	**20**	M10	28	2.0	–	517	2587	5.00	-30	80	90.0	25150.1451
50	**30**	M10	28	2.0	–	327	2453	7.50	-30	80	112.0	25150.1452
50	**40**	M10	28	2.0	–	247	2468	10.00	-30	80	133.0	25150.1453
60	**20**	M10	28	2.0	–	726	3630	5.00	-30	80	117.0	25150.1461
60	**40**	M10	28	2.0	–	340	3400	10.00	-30	80	184.0	25150.1462
70	**40**	M10	27	3.0	–	410	4100	10.00	-30	80	249.0	25150.1471
70	**55**	M10	27	3.0	–	327	4500	13.75	-30	80	310.0	25150.1472
75	**25**	M12	37	3.0	–	752	4700	6.25	-30	80	214.0	25150.1476
75	**40**	M12	37	3.0	–	450	4500	10.00	-30	80	288.0	25150.1477
75	**50**	M12	37	3.0	–	352	4400	12.50	-30	80	342.0	25150.1478
100	**40**	M16	41	3.0	–	810	8100	10.00	-30	80	579.0	25150.1482
100	**50**	M16	41	3.0	–	640	8000	12.50	-30	80	674.0	25150.1484
100	**60**	M16	41	3.0	–	520	7800	15.00	-30	80	758.0	25150.1486

chanhvinh.com

Application example

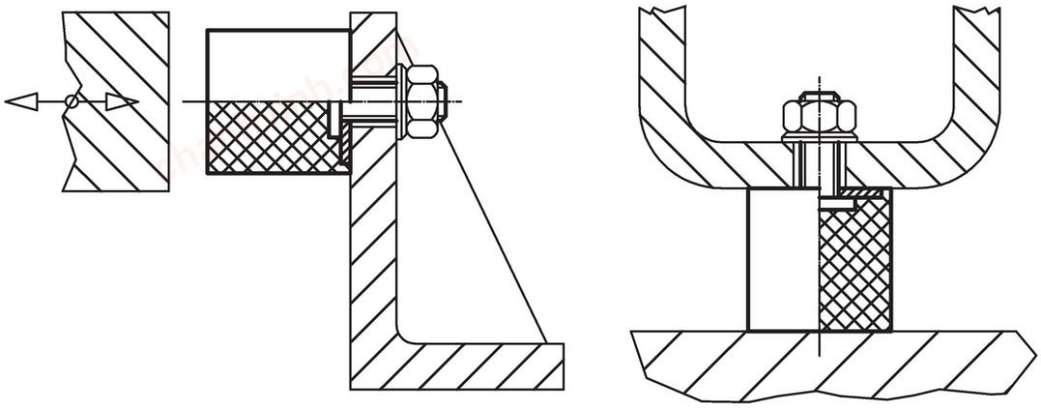

Compliance

For detailed compliance information please select the desired article number.