chanhvinh.com

Rubber Metal Buffers • cylindrical

EH 25150.



Product Description

To be used for elastic bearing of motors, compressors, pumps etc.
The hardness is 55 ±5° Shore A. Further shore hardnesses (40 ±5° Shore A and 70 ±5° Shore A) on request.

Material

Support washer
- Steel, zinc-plated, blue chromated

Threaded bushing
- Steel, zinc-plated, blue chromated

Body
- Rubber natural caoutchouc (NR), black

Screw
- Steel, zinc-plated, blue chromated

Drawing

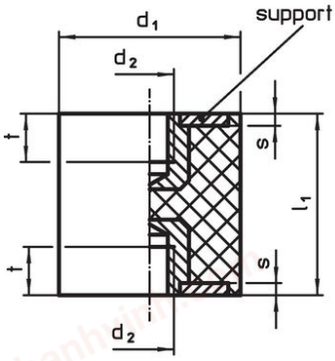

picture 1

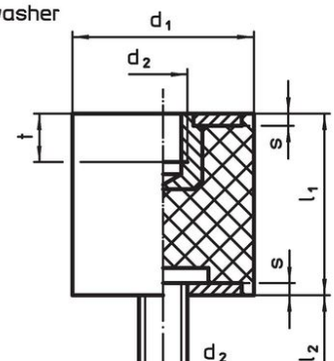

picture 2

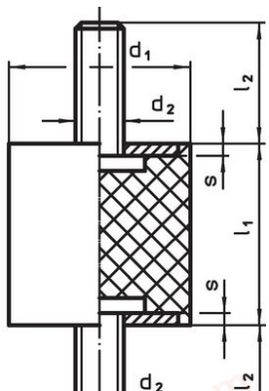

picture 3

Order information

Dimensions						Spring rate R	Load capacity	Spring range				Art. No.
d_1 ±1.5	l_1 ±1.5	d_2	l_2	s	t ~	~	max.	~	min.	max.		
[mm]						[N/mm]	[N]	[mm]	[°C]		[g]	
with female thread, on both sides – picture 1												
8	**8**	M 3	–	1.0	3.0	38	75	2.00	-30	80	1.0	25150.0003
10	**10**	M 4	–	1.2	4.0	36	90	2.50	-30	80	2.5	25150.0006
10	**15**	M 4	–	1.2	4.0	17	65	3.75	-30	80	2.9	25150.0007
15	**10**	M 4	–	1.4	4.0	80	200	2.50	-30	80	5.6	25150.0008
15	**15**	M 4	–	1.4	4.0	36	135	3.75	-30	80	7.8	25150.0009
15	**20**	M 4	–	1.4	4.0	30	152	5.00	-30	80	7.4	25150.0010
20	**15**	M 6	–	2.0	5.0	95	355	3.75	-30	80	13.0	25150.0021
20	**20**	M 6	–	2.0	5.0	53	267	5.00	-30	80	14.0	25150.0022
20	**25**	M 6	–	2.0	5.0	50	315	6.25	-30	80	16.0	25150.0023
25	**20**	M 6	–	2.0	5.0	121	605	5.00	-30	80	22.0	25150.0026
25	**25**	M 6	–	2.0	5.0	85	530	6.25	-30	80	30.0	25150.0027
25	**30**	M 6	–	2.0	5.0	77	575	7.50	-30	80	30.0	25150.0028
30	**30**	M 8	–	2.0	6.5	114	855	7.50	-30	80	50.0	25150.0031
30	**40**	M 8	–	2.0	6.5	76	757	10.00	-30	80	50.0	25150.0032
40	**30**	M 8	–	2.0	6.5	205	1535	7.50	-30	80	80.0	25150.0041
40	**40**	M 8	–	2.0	6.5	164	1635	10.00	-30	80	100.0	25150.0042
50	**30**	M10	–	2.0	7.0	343	2570	7.50	-30	80	130.0	25150.0051

chanhvinh.com

Dimensions						Spring rate R ~	Load capacity max.	Spring range ~	min.	max.		Art. No.
d_1 ±1.5	l_1 ±1.5	d_2	l_2	s	t ~							
[mm]						[N/mm]	[N]	[mm]	[°C]		[g]	
50	**40**	M10	–	2.0	7.0	245	2445	10.00	-30	80	150.0	25150.0052
50	**50**	M10	–	2.0	7.0	178	2225	12.50	-30	80	166.0	25150.0053
60	**30**	M10	–	2.0	7.0	453	3400	7.50	-30	80	190.0	25150.0061
60	**40**	M10	–	2.0	7.0	330	3300	10.00	-30	80	220.0	25150.0062
70	**45**	M10	–	3.0	7.0	356	4000	11.25	-30	80	340.0	25150.0071
75	**40**	M12	–	3.0	9.0	465	4650	10.00	-30	80	360.0	25150.0076
75	**55**	M12	–	3.0	9.0	327	4500	13.75	-30	80	450.0	25150.0077
with female thread and screw – picture 2												
8	**8**	M 3	6	1.0	3.0	38	75	2.00	-30	80	1.2	25150.0103
10	**10**	M 4	10	1.2	4.0	36	90	2.50	-30	80	2.4	25150.0106
10	**15**	M 4	10	1.2	4.0	17	65	3.75	-30	80	3.5	25150.0107
15	**10**	M 4	10	1.4	4.0	80	200	2.50	-30	80	5.7	25150.0108
15	**15**	M 4	10	1.4	4.0	35	130	3.75	-30	80	6.6	25150.0109
15	**20**	M 4	10	1.4	4.0	30	150	5.00	-30	80	7.6	25150.0110
20	**15**	M 6	18	2.0	5.0	95	355	3.75	-30	80	15.0	25150.0121
20	**20**	M 6	18	2.0	5.0	53	265	5.00	-30	80	17.0	25150.0122
20	**25**	M 6	18	2.0	5.0	50	315	6.25	-30	80	18.0	25150.0123
25	**15**	M 6	18	2.0	5.0	184	690	3.75	-30	80	26.0	25150.0126
25	**20**	M 6	18	2.0	5.0	121	605	5.00	-30	80	26.0	25150.0127
25	**30**	M 6	18	2.0	5.0	76	570	7.50	-30	80	36.0	25150.0128
30	**15**	M 8	20	2.0	6.5	143	535	3.75	-30	80	41.0	25150.0131
30	**30**	M 8	20	2.0	6.5	113	850	7.50	-30	80	50.0	25150.0132
40	**20**	M 8	23	2.0	6.5	302	1510	5.00	-30	80	72.0	25150.0141
40	**30**	M 8	23	2.0	6.5	204	1530	7.50	-30	80	85.0	25150.0142
40	**40**	M 8	23	2.0	6.5	163	1630	10.00	-30	80	98.0	25150.0143
50	**20**	M10	28	2.0	7.0	720	3600	5.00	-30	80	115.0	25150.0151
50	**30**	M10	28	2.0	7.0	343	2575	7.50	-30	80	135.0	25150.0152
50	**40**	M10	28	2.0	7.0	244	2440	10.00	-30	80	160.0	25150.0153
50	**50**	M10	28	2.0	7.0	176	2200	12.50	-30	80	185.0	25150.0154
60	**30**	M10	28	2.0	7.0	453	3400	7.50	-30	80	200.0	25150.0161
60	**40**	M10	28	2.0	7.0	333	3330	10.00	-30	80	220.0	25150.0162
70	**45**	M10	27	3.0	7.0	356	4000	11.25	-30	80	372.0	25150.0171
75	**40**	M12	37	3.0	9.0	460	4600	10.00	-30	80	385.0	25150.0176
75	**55**	M12	37	3.0	9.0	328	4510	13.75	-30	80	453.0	25150.0177
with screw, on both sides – picture 3												
8	**8**	M 3	6	1.0	–	35	70	2.00	-30	80	1.4	25150.0203
10	**10**	M 4	10	1.2	–	36	89	2.50	-30	80	3.0	25150.0206
10	**15**	M 4	10	1.2	–	16	60	3.75	-30	80	3.5	25150.0207
15	**10**	M 4	10	1.4	–	79	198	2.50	-30	80	6.1	25150.0208
15	**15**	M 4	10	1.4	–	33	125	3.75	-30	80	7.1	25150.0209
15	**20**	M 4	10	1.4	–	29	145	5.00	-30	80	8.1	25150.0210
20	**15**	M 6	18	2.0	–	94	352	3.75	-30	80	18.0	25150.0221
20	**20**	M 6	18	2.0	–	52	260	5.00	-30	80	19.0	25150.0222
20	**25**	M 6	18	2.0	–	50	310	6.25	-30	80	20.0	25150.0223
25	**15**	M 6	18	2.0	–	183	687	3.75	-30	80	28.0	25150.0226
25	**20**	M 6	18	2.0	–	120	602	5.00	-30	80	32.0	25150.0227
25	**30**	M 6	18	2.0	–	75	562	7.50	-30	80	39.0	25150.0228
30	**15**	M 8	20	2.0	–	142	534	3.75	-30	80	45.0	25150.0231
30	**30**	M 8	20	2.0	–	112	843	7.50	-30	80	58.0	25150.0232
40	**20**	M 8	23	2.0	–	300	1500	5.00	-30	80	80.0	25150.0241
40	**30**	M 8	23	2.0	–	204	1527	7.50	-30	80	95.0	25150.0242
40	**40**	M 8	23	2.0	–	162	1620	10.00	-30	80	100.0	25150.0243
50	**20**	M10	28	2.0	–	718	3589	5.00	-30	80	130.0	25150.0251
50	**30**	M10	28	2.0	–	343	2570	7.50	-30	80	150.0	25150.0252
50	**40**	M10	28	2.0	–	244	2436	10.00	-30	80	170.0	25150.0253
50	**50**	M10	28	2.0	–	176	2198	12.50	-30	80	187.0	25150.0254
60	**30**	M10	28	2.0	–	453	3400	7.50	-30	80	210.0	25150.0261

chanhvinh.com

Dimensions						Spring rate R ~	Load capacity max.	Spring range ~	min.	max.		Art. No.
d_1 ±1.5	l_1 ±1.5	d_2	l_2	s	t ~							
[mm]						[N/mm]	[N]	[mm]	[°C]		[g]	
60	**40**	M10	28	2.0	–	330	3300	10.00	-30	80	236.0	25150.0262
70	**45**	M10	27	3.0	–	356	4000	11.25	-30	80	380.0	25150.0271
75	**40**	M12	37	3.0	–	450	4500	10.00	-30	80	410.0	25150.0276
75	**55**	M12	37	3.0	–	320	4400	13.75	-30	80	515.0	25150.0277

Application example

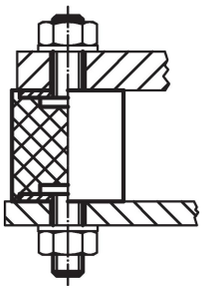

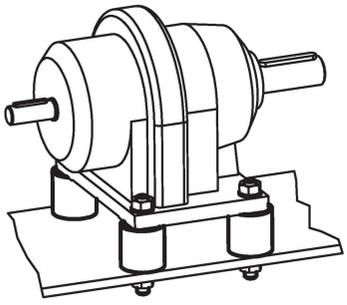

Compliance

For detailed compliance information please select the desired article number.