chanhvinh.com



# Height-Adjusting Elements • orienting

## EH 25120.



### Product Description

For levelling of machines and installations when bearing surfaces are not parallel.
For vertical adjustment, the self-locking height-adjusting elements are fitted with a fine-pitch thread. All elements have a throughgoing bore for fastening purposes. A turn-out lock serves as height limit for the maximum adjustment height.

#### Material

- Heat-treated steel, zinc-plated by galvanization, chromalized

### Drawing

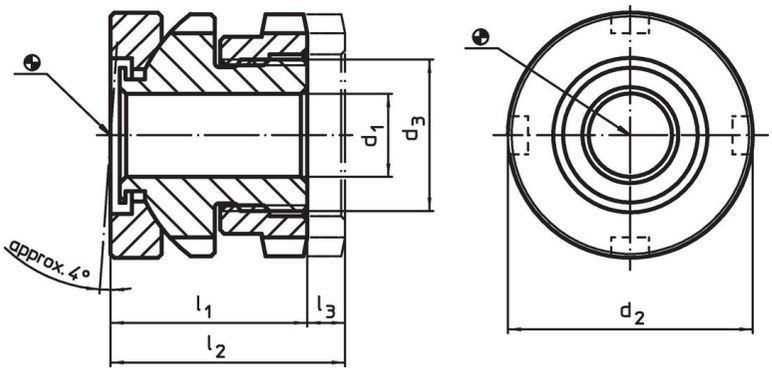


### Order information

| $d_1$ | $d_2$ | Dimensions $d_3$ [mm] | $l_1$ ~ | $l_2$ ~ | Stroke $l_3$ ~ [mm] | For screw [mm] | Load capacity for static load max. [kN] | Load capacity[1] max. [kN] | | Art. No. |
|---|---|---|---|---|---|---|---|---|---|---|
| **6.6** | **25** | M15 x 1 | 22 | 26 | 4 | M 6 | 40 | 30.7 | 64.0 g | 25120.0206 |
| **6.6** | **32** | M20 x 1 | 26 | 31 | 5 | M 6 | 65 | 55.7 | 131.0 g | 25120.0212 |
| **9.0** | **32** | M20 x 1 | 26 | 31 | 5 | M 8 | 65 | 48.0 | 124.0 g | 25120.0214 |
| **11.0** | **32** | M20 x 1 | 26 | 31 | 5 | M10 | 65 | 37.9 | 117.0 g | 25120.0216 |
| **11.0** | **45** | M30 x 1,5 | 34 | 41 | 7 | M10 | 120 | 92.9 | 326.0 g | 25120.0222 |
| **13.5** | **45** | M30 x 1,5 | 34 | 41 | 7 | M12 | 120 | 80.4 | 320.0 g | 25120.0224 |
| **17.5** | **45** | M30 x 1,5 | 34 | 41 | 7 | M16 | 120 | 45.5 | 324.0 g | 25120.0226 |
| **17.5** | **58** | M40 x 1,5 | 44 | 53 | 9 | M16 | 210 | 136.0 | 775.0 g | 25120.0232 |
| **22.0** | **58** | M40 x 1,5 | 44 | 53 | 9 | M20 | 210 | 90.0 | 641.0 g | 25120.0234 |
| **26.0** | **58** | M40 x 1,5 | 44 | 53 | 9 | M24 | 210 | 37.0 | 683.0 g | 25120.0236 |
| **22.0** | **70** | M50 x 1,5 | 50 | 60 | 10 | M20 | 330 | 210.0 | 1.1 kg | 25120.0242 |
| **26.0** | **70** | M50 x 1,5 | 50 | 60 | 10 | M24 | 330 | 157.0 | 1.1 kg | 25120.0244 |
| **33.0** | **70** | M50 x 1,5 | 50 | 60 | 10 | M30 | 330 | 53.0 | 990.0 g | 25120.0246 |

[1] Load capacity after deduction of the maximum preload force for screws 8.8.

### Accessories

| | For height adjusting element size $d_2$ [mm] | Dimensions of sickle spanner DIN 1810, form A [mm] | [g] | Art. No. |
|---|---|---|---|---|
| **sickle spanner for vertical adjustment** | | | | |
|  | **25** | 25 – 28 | 45 | 25120.0981 |
| | **32** | 30 – 32 | 46 | 25120.0982 |
| | **45** | 45 – 50 | 156 | 25120.0983 |
| | **58** | 58 – 62 | 250 | 25120.0984 |
| | **70** | 68 – 75 | 253 | 25120.0985 |

chanhvinh.com



## Application example

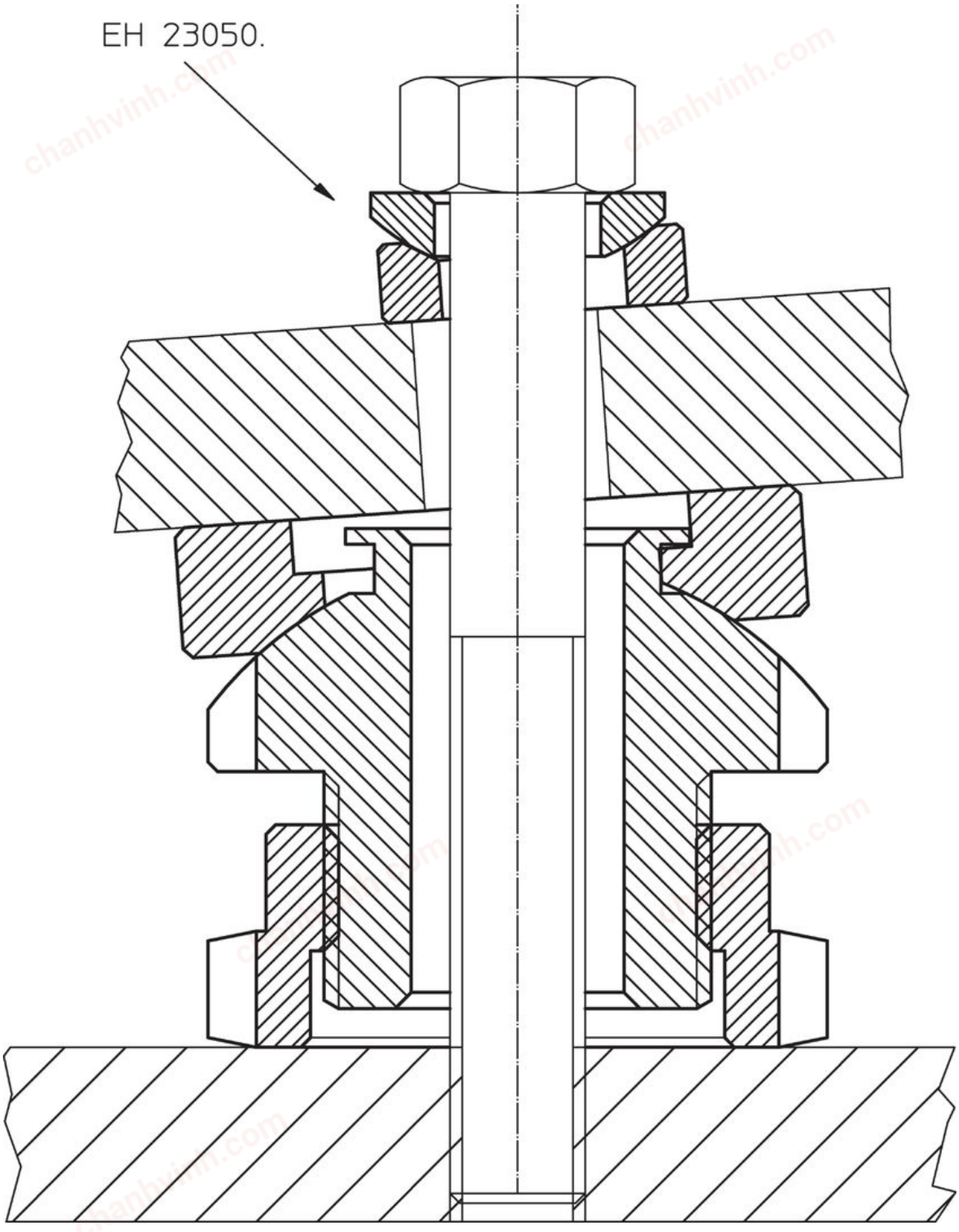


## Compliance

For detailed compliance information please select the desired article number.