chanhvinh.com

Height-Adjusting Elements • high

EH 25120.



Product Description

For levelling of machines and installations.
For vertical adjustment, the self-locking height-adjusting elements are fitted with a fine-pitch thread. All elements have a throughgoing bore for fastening purposes. A turn-out lock serves as height limit for the maximum adjustment height.

Material

- Heat-treated steel, zinc-plated by galvanization, chromalized

Drawing

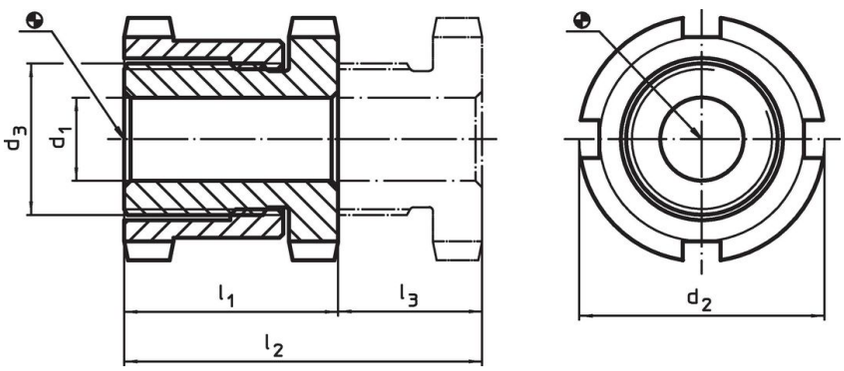

Order information

Dimensions d_1	d_2	d_3	l_1 ~	l_2 ~	Stroke l_3 ~	For screw	Load capacity for static load max.	Load capacity[1] max.		Art. No.
[mm]					[mm]	[mm]	[kN]	[kN]		
6.6	**25**	M15 x 1	28	43	15	M 6	40	30.7	68.0 g	25120.0106
6.6	**32**	M20 x 1	35	55	20	M 6	65	55.7	161.0 g	25120.0112
9.0	**32**	M20 x 1	35	55	20	M 8	65	48.0	152.0 g	25120.0114
11.0	**32**	M20 x 1	35	55	20	M10	65	37.9	142.0 g	25120.0116
11.0	**45**	M30 x 1,5	42	67	25	M10	120	92.9	371.0 g	25120.0122
13.5	**45**	M30 x 1,5	42	67	25	M12	120	80.4	356.0 g	25120.0124
17.5	**45**	M30 x 1,5	42	67	25	M16	120	45.5	326.0 g	25120.0126
17.5	**58**	M40 x 1,5	54	86	32	M16	210	136.0	835.0 g	25120.0132
22.0	**58**	M40 x 1,5	54	86	32	M20	210	90.0	771.0 g	25120.0134
26.0	**58**	M40 x 1,5	54	86	32	M24	210	37.0	705.0 g	25120.0136
22.0	**70**	M50 x 1,5	66	106	40	M20	330	210.0	1.4 kg	25120.0142
26.0	**70**	M50 x 1,5	66	106	40	M24	330	157.0	1.3 kg	25120.0144
33.0	**70**	M50 x 1,5	66	106	40	M30	330	53.0	1.2 kg	25120.0146

[1] Load capacity after deduction of the maximum preload force for screws 8.8.

chanhvinh.com

Accessories

	For height adjusting element size d_2 [mm]	Dimensions of sickle spanner DIN 1810, form A [mm]	[g]	Art. No.
sickle spanner for vertical adjustment				
	**25**	25 – 28	45	25120.0981
	32	30 – 32	46	25120.0982
	45	45 – 50	156	25120.0983
	58	58 – 62	250	25120.0984
	70	68 – 75	253	25120.0985

Application example

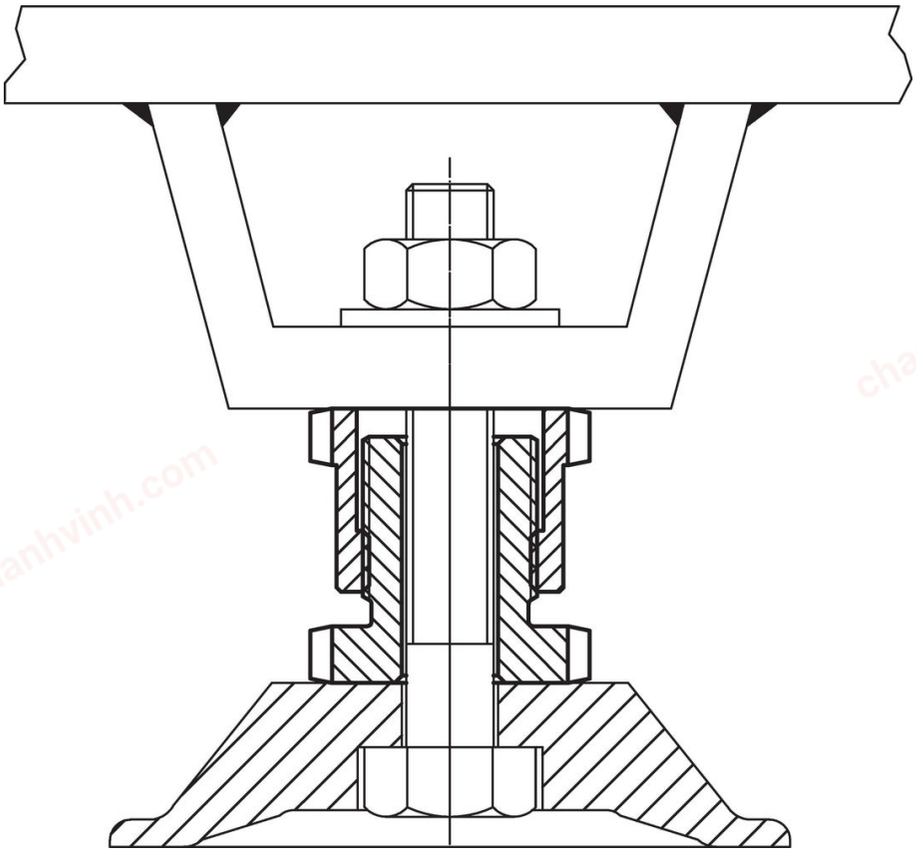

Compliance

For detailed compliance information please select the desired article number.