chanhvinh.com

Quick Plug Couplings • with angular and radial offset compensation

EH 25100.



Product Description

Quick plug coupling, adjustable without axial play, including angular and radial offset compensation. Suitable for multiple applications, e.g. for non-aligned linear movements. Solid and compact design, no loose elements.

Material

Claw
- Heat-treated steel, tempered, phosphated

Seat
- Heat-treated steel, tempered, phosphated

Coupling part
- Heat-treated steel, nitrided, black

Nut
- Heat-treated steel, phosphated

Lock nut
- Steel, black (ISO 4035/8675)

Spring
- Stainless steel

Assembly

Assembly and disassembly is by means of a T-slot; a manual re-adjustment is not necessary.
The quick plug coupling can be linked to all commonly used pneumatic and hydraulic lifting cylinders via the connecting thread.

More information

Notes

The quick plug coupling does not transmit any torque.

Drawing

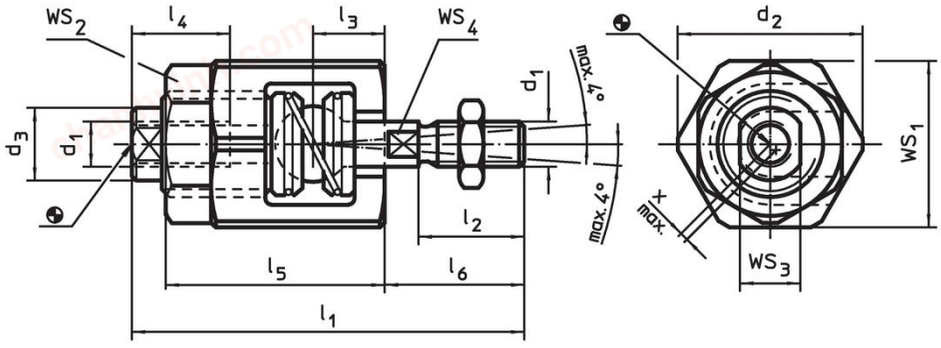

Order information

Dimensions									WS				Radial offset compensation x max.	Maximum tensile and compressive load max.		Art. No.
d_1	d_2	d_3	l_1 ~	l_2	l_3	l_4 min.	l_5	l_6	WS_1	WS_2	WS_3	WS_4				
[mm]									[mm]				[mm]	[kN]		
M 6	24.5	9.6	52	14	9.5	13	29	18.5	22	19	8	5	0.6	2.5	77.0 g	25100.0406
M 8	30.0	15.0	63	18	11.5	16	33	23.5	27	24	13	7	0.6	4.5	138.0 g	25100.0408
M10	44.0	21.0	81	22	16.0	24	43	30.5	41	36	18	12	0.7	6.5	400.0 g	25100.0410
M12	44.0	21.0	85	26	16.0	24	43	34.5	41	36	18	12	0.7	10.0	399.0 g	25100.0412
M16	60.0	32.0	121	34	26.0	34	62	45.0	55	46	27	18	1.0	18.0	1.1 kg	25100.0416
M20	60.0	32.0	129	42	26.0	34	62	53.0	55	46	27	18	1.0	30.0	1.2 kg	25100.0420
M10 x 1,25	44.0	21.0	81	22	16.0	24	43	30.5	41	36	18	12	0.7	6.5	396.0 g	25100.0430
M12 x 1,25	44.0	21.0	85	26	16.0	24	43	34.5	41	36	18	12	0.7	10.0	399.0 g	25100.0432
M16 x 1,5	60.0	32.0	121	34	26.0	34	62	45.0	55	46	27	18	1.0	18.0	1.1 kg	25100.0436
M20 x 1,5	60.0	32.0	129	42	26.0	34	62	53.0	55	46	27	18	1.0	30.0	1.2 kg	25100.0440

chanhvinh.com

Application example

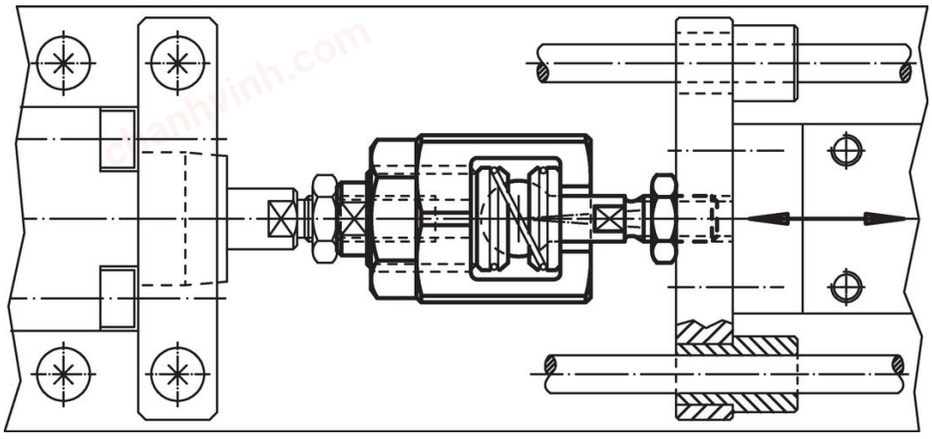

Compliance

For detailed compliance information please select the desired article number.