chanhvinh.com

Quick Plug Couplings • with radial offset compensation and screwed flange
EH 25100.





Product Description

Quick plug coupling with radial offset compensation requiring only little space. Suitable for multiple applications, e.g. as a link between a piston rod and a linear-movement unit.

Material

Flange
- Heat-treated steel, tempered, phosphated

Coupling part
- Heat-treated steel, tempered, phosphated

Lock nut
- Steel, black (ISO 4035/8675)

Assembly

Assembly and disassembly of this simple, solid and two-part coupling is by means of a T-slot; a manual re-adjustment is not necessary. The quick plug coupling can be linked to all commonly used pneumatic and hydraulic lifting cylinders via the connecting thread.

More information

Notes

The quick plug coupling does not transmit any torque.

Drawing

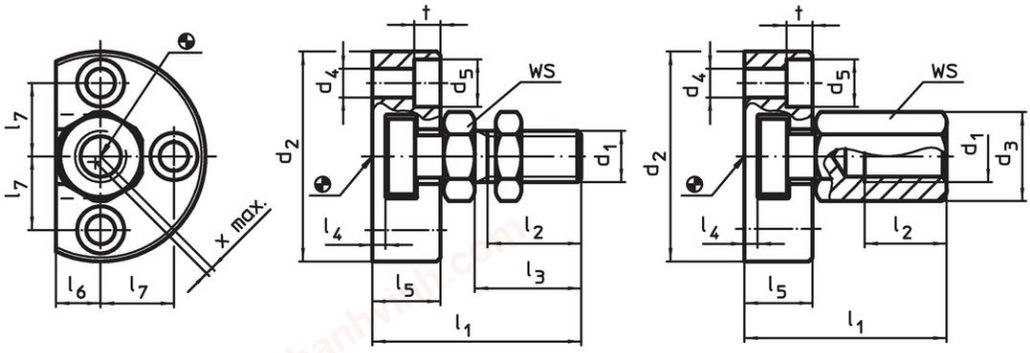

picture 1 picture 2

Order information

Dimensions													WS	Radial offset compensation x max.	Maximum tensile and compressive load max.		Art. No.
d_1	d_2	d_3	d_4	d_5	l_1 ~	l_2 min.	l_3	l_4	l_5	l_6	l_7	t					
[mm]													[mm]	[mm]	[kN]	[g]	
with coupling screw – picture 1																	
M 6	42	–	5.5	10	30.5	11.0	14	3.0	11.0	7.0	14.0	5.4	10	0.6	2.5	76	25100.0206
M 8	48	–	6.6	11	35.5	13.5	17	3.0	13.0	8.0	16.0	6.4	13	0.7	4.5	119	25100.0208
M10	50	–	6.6	11	43.2	16.0	20	4.2	16.0	9.0	17.0	6.4	17	0.7	6.5	176	25100.0210
M12	55	–	6.6	11	53.2	21.0	25	4.2	20.5	10.0	19.0	6.4	19	0.8	10.0	279	25100.0212
M16	65	–	9.0	15	64.0	25.0	30	5.0	23.0	12.5	22.5	8.5	24	1.0	18.0	455	25100.0216
M20	80	–	11.0	18	74.0	29.0	35	5.0	26.0	17.0	28.0	10.0	30	1.0	30.0	810	25100.0220
M10 x 1,25	50	–	6.6	11	43.2	16.0	20	4.2	16.0	9.0	17.0	6.4	17	0.7	6.5	176	25100.0230
M12 x 1,25	55	–	6.6	11	53.2	21.0	25	4.2	20.5	10.0	19.0	6.4	19	0.8	10.0	280	25100.0232
M16 x 1,5	65	–	9.0	15	64.0	25.0	30	5.0	23.0	12.5	22.5	8.5	24	1.0	18.0	454	25100.0236
M20 x 1,5	80	–	11.0	18	74.0	29.0	35	5.0	26.0	17.0	28.0	10.0	30	1.0	30.0	812	25100.0240
with coupling nut – picture 2																	
M 6	42	11.0	5.5	10	30.5	11.0	–	3.0	11.0	7.0	14.0	5.4	10	0.6	2.5	77	25100.0256
M 8	48	14.4	6.6	11	35.5	13.5	–	3.0	13.0	8.0	16.0	6.4	13	0.7	4.5	123	25100.0258
M10	50	19.0	6.6	11	43.2	15.0	–	4.2	16.0	9.0	17.0	6.4	17	0.7	6.5	187	25100.0260
M12	55	21.2	6.6	11	53.2	17.5	–	4.2	20.5	10.0	19.0	6.4	19	0.8	10.0	298	25100.0262
M16	65	27.0	9.0	15	64.0	22.0	–	5.0	23.0	12.5	22.5	8.5	24	1.0	18.0	471	25100.0266
M20	80	34.0	11.0	18	74.0	25.0	–	5.0	26.0	17.0	28.0	10.0	30	1.0	30.0	850	25100.0270

chanhvinh.com

Dimensions													WS	Radial offset compensation x max.	Maximum tensile and compressive load max.		Art. No.
d_1	d_2	d_3	d_4	d_5	l_1 ~	l_2 min.	l_3	l_4	l_5	l_6	l_7	t					
[mm]													[mm]	[mm]	[kN]	[g]	
M10 x 1,25	50	19.0	6.6	11	43.2	15.0	–	4.2	16.0	9.0	17.0	6.4	17	0.7	6.5	187	25100.0280
M12 x 1,25	55	21.2	6.6	11	53.2	17.5	–	4.2	20.5	10.0	19.0	6.4	19	0.8	10.0	296	25100.0282
M16 x 1,5	65	27.0	9.0	15	64.0	22.0	–	5.0	23.0	12.5	22.5	8.5	24	1.0	18.0	474	25100.0286
M20 x 1,5	80	34.0	11.0	18	74.0	25.0	–	5.0	26.0	17.0	28.0	10.0	30	1.0	30.0	841	25100.0290

Application example

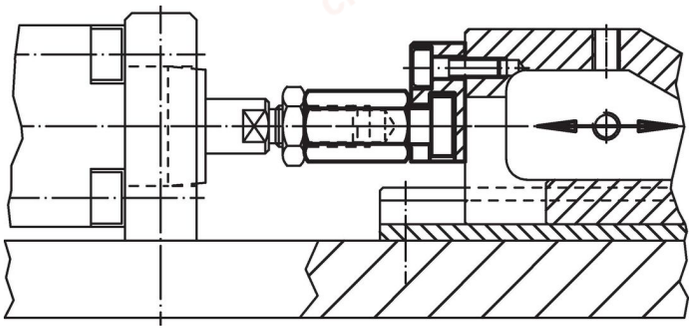

Compliance

RoHS-compliant
Compliant with Directive 2011/65/EU [RoHS].

Does not contain SVHC substances
No SVHC substances with more than 0.1% w/w contained - SVHC list [REACH] as of 04.02.2026.

SCIP-code
N/A

Contains Proposition 65 substances
Nickel can cause cancer from exposure.
https://www.P65Warnings.ca.gov/

Free from Conflict Minerals
This product does not contain any substances designated as "conflict minerals" such as tantalum, tin, gold or tungsten from the Democratic Republic of Congo or adjacent countries.

POP-compliant
Contains no persistent organic pollutants – Stockholm Convention [POP] as of September 2025.

PFAS-compliant
Contains no per- and polyfluoroalkyl substances (PFAS).

TSCA-compliant
Agent concentration in this product does not exceed the specified threshold.