chanhvinh.com

Quick Plug Couplings • with radial offset compensation

EH 25100.



Product Description

Quick plug coupling with radial offset compensation for multiple applications, e.g. as a link between a piston rod and a linear movement unit.

Material

Claw
- Heat-treated steel, tempered, phosphated

Coupling part
- Heat-treated steel, tempered, phosphated

Lock nut
- Steel, black (ISO 4035/8675)

Assembly

Assembly and disassembly of this simple, solid and two-part coupling is by means of a T-slot; a manual re-adjustment is not necessary. The quick plug coupling can be linked to all commonly used pneumatic and hydraulic lifting cylinders via the connecting thread.

More information

Notes

The quick plug coupling does not transmit any torque.

Drawing

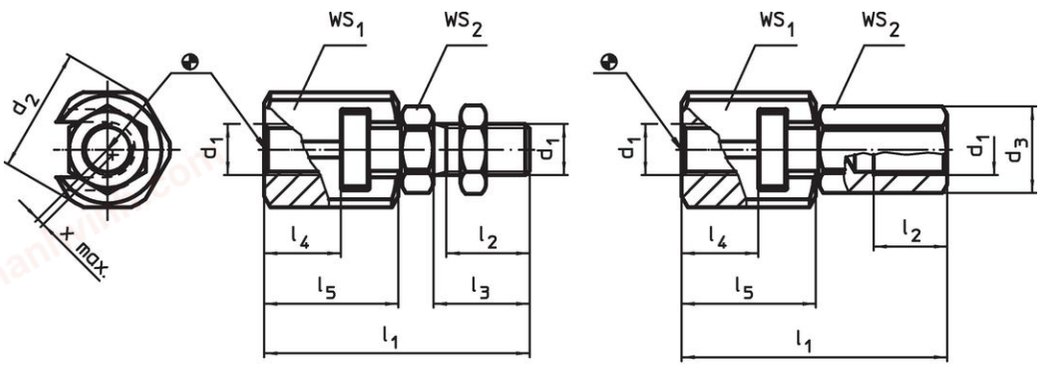

Order information

Dimensions								WS		Radial offset compensation x max.	Maximum tensile and compressive load max.		Art. No.
d_1	d_2	d_3	l_1 ~	l_2 min.	l_3	l_4 min.	l_5	WS_1	WS_2				
[mm]								[mm]		[mm]	[kN]	[g]	
with coupling screw – picture 1													
M 6	21.0	–	37.5	11.0	14	9.0	18.0	19	10	0.6	2.5	44	25100.0006
M 8	26.0	–	45.0	13.5	17	11.5	22.5	24	13	0.7	4.5	86	25100.0008
M10	30.0	–	56.2	16.0	20	16.0	29.0	27	17	0.7	6.5	148	25100.0010
M12	32.5	–	66.7	21.0	25	17.0	34.0	30	19	0.8	10.0	209	25100.0012
M16	39.0	–	83.0	25.0	30	23.0	42.0	36	24	1.0	18.0	383	25100.0016
M20	44.0	–	93.5	29.0	35	23.5	45.5	41	30	1.0	30.0	572	25100.0020
M10 x 1,25	30.0	–	56.2	16.0	20	16.0	29.0	27	17	0.7	6.5	148	25100.0030
M12 x 1,25	32.5	–	66.7	21.0	25	17.0	34.0	30	19	0.8	10.0	209	25100.0032
M16 x 1,5	39.0	–	83.0	25.0	30	23.0	42.0	36	24	1.0	18.0	384	25100.0036
M20 x 1,5	44.0	–	93.5	29.0	35	23.5	45.5	41	30	1.0	30.0	572	25100.0040
with coupling nut – picture 2													
M 6	21.0	11.0	37.5	11.0	–	9.0	18.0	19	10	0.6	2.5	47	25100.0056
M 8	26.0	14.4	45.0	13.5	–	11.5	22.5	24	13	0.7	4.5	91	25100.0058
M10	30.0	19.0	56.2	15.0	–	16.0	29.0	27	17	0.7	6.5	159	25100.0060
M12	32.5	21.2	66.7	17.5	–	17.0	34.0	30	19	0.8	10.0	224	25100.0062
M16	39.0	27.0	83.0	22.0	–	23.0	42.0	36	24	1.0	18.0	401	25100.0066
M20	44.0	34.0	93.5	25.0	–	23.5	45.5	41	30	1.0	30.0	606	25100.0070

chanhvinh.com

Dimensions								WS		Radial offset compensation x max.	Maximum tensile and compressive load max.		Art. No.
d_1	d_2	d_3	l_1 ~	l_2 min.	l_3	l_4 min.	l_5	WS_1	WS_2				
[mm]								[mm]		[mm]	[kN]	[g]	
M10 x 1,25	30.0	19.0	56.2	15.0	–	16.0	29.0	27	17	0.7	6.5	160	25100.0080
M12 x 1,25	32.5	21.2	66.7	17.5	–	17.0	34.0	30	19	0.8	10.0	223	25100.0082
M16 x 1,5	39.0	27.0	83.0	22.0	–	23.0	42.0	36	24	1.0	18.0	398	25100.0086
M20 x 1,5	44.0	34.0	93.5	25.0	–	23.5	45.5	41	30	1.0	30.0	597	25100.0090

Application example

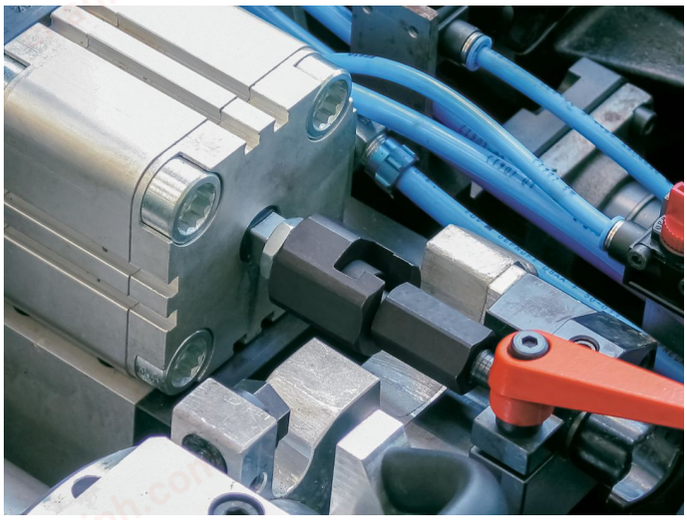

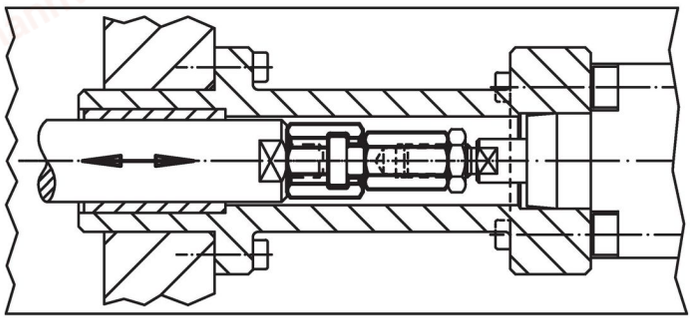

chanhvinh.com

Compliance

RoHS-compliant
Compliant with Directive 2011/65/EU [RoHS].

Does not contain SVHC substances
No SVHC substances with more than 0.1% w/w contained - SVHC list [REACH] as of 04.02.2026.

SCIP-code
N/A

Contains Proposition 65 substances

Nickel can cause cancer from exposure.
https://www.P65Warnings.ca.gov/

Free from Conflict Minerals
This product does not contain any substances designated as "conflict minerals" such as tantalum, tin, gold or tungsten from the Democratic Republic of Congo or adjacent countries.

POP-compliant
Contains no persistent organic pollutants – Stockholm Convention [POP] as of September 2025.

PFAS-compliant
Contains no per- and polyfluoroalkyl substances (PFAS).

TSCA-compliant
Agent concentration in this product does not exceed the specified threshold.