chanhvinh.com

Set Collars • with quick setting

EH 25071.



Product Description

To be used for positioning, gripping, clamping and as a quick adjustment element on shafts. Quick, self-clamping and vibration-free mounting by one-hand operation in pull-direction.

Material

Body
- Thermoplastic PA 6, black

Inner parts
- Stainless steel

O-ring
- NBR

Drawing

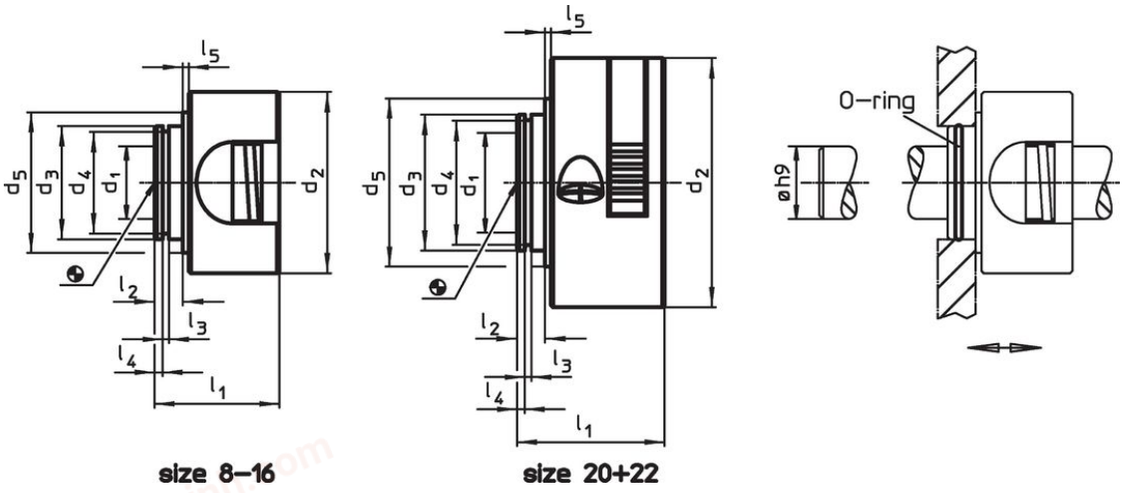

Order information

Dimensions										F			Art. No.
d_1 +0.1	d_2	d_3	d_4	d_5	l_1	l_2	l_3	l_4	l_5	Holding force axial, one-sided	max.		
[mm]										[N]	[°C]	[g]	
8	40	25	22.4	31	27.5	7	1.7	3.15	0.5	250	80	31	25071.0008
10	40	25	22.4	31	27.5	7	1.7	3.15	0.5	250	80	34	25071.0010
12	40	25	22.4	31	27.5	7	1.7	3.15	0.5	350	80	30	25071.0012
15	40	25	22.4	31	27.5	7	1.7	3.15	0.5	350	80	28	25071.0015
16	40	25	22.4	31	27.5	7	1.7	3.15	0.5	380	80	27	25071.0016
20	55	30	27.4	37	32.5	7	1.7	2.65	0.5	320	80	51	25071.0020
22	55	30	27.4	37	32.5	7	1.7	2.65	0.5	320	80	49	25071.0022

Accessories

	Dimensions d [mm]	Suitable for size [mm]	[g]	Art. No.
O-ring				
	**22 x 1.5**	8, 10, 12, 15, 16	0.2	25071.0052
	27 x 1.5	20, 22	0.2	25071.0054

chanhvinh.com

Application example

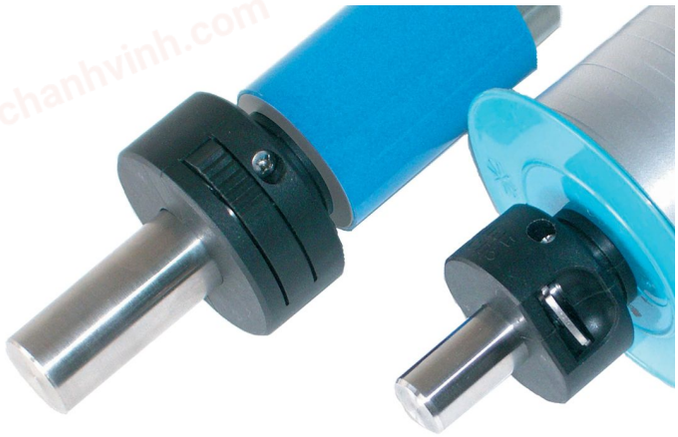

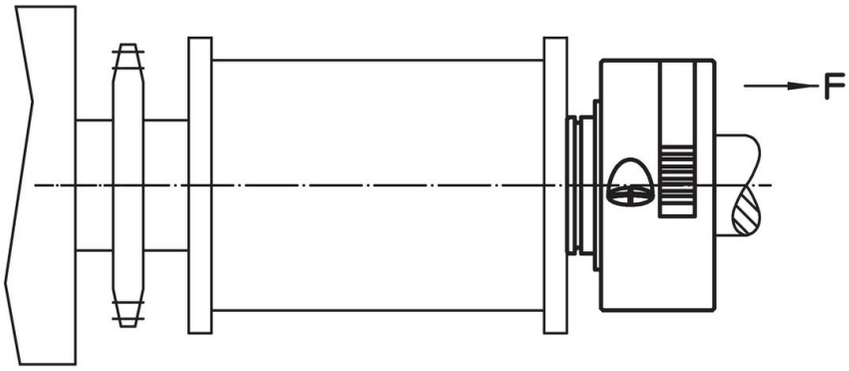

Compliance

For detailed compliance information please select the desired article number.