chanhvinh.com

Set Collars • with sensor adapter
EH 25070.



Product Description

Clamping rings are provided with a fastening possibility for sensors, switches etc. Universal applicability, e.g. as a limit switch on a piston rod.
Clamping ring made of stainless steel with strong clamping force.

Material

Screw
- Stainless steel

Set collar
- Stainless steel 1.4021

Drawing

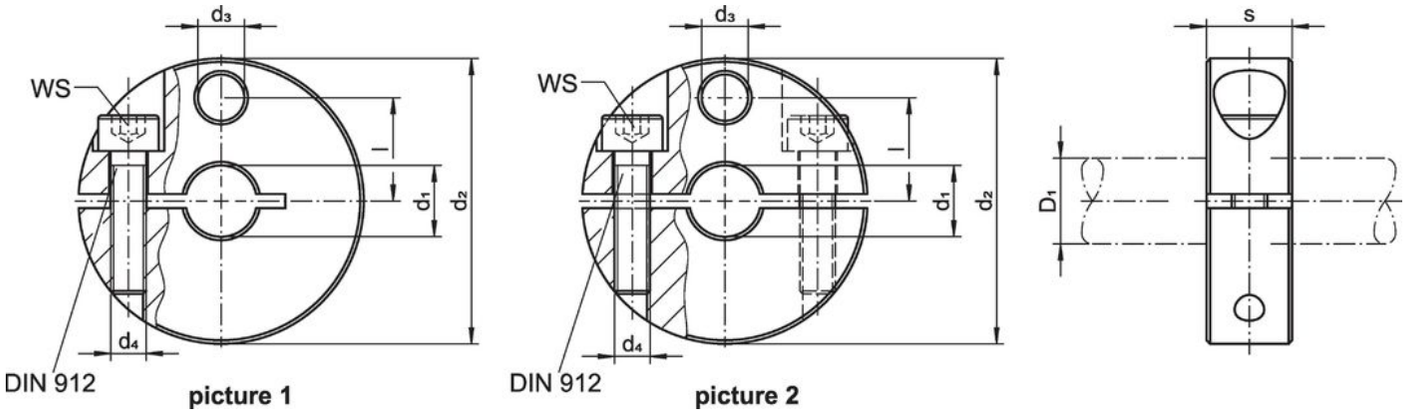

Order information

Dimensions						WS	D_1		Art. No.
d_1 H8	d_2 -0.5	d_3	d_4	l	s		h11		
[mm]						[mm]	[mm]	[g]	
slotted – picture 1									
10	40	6.5	M5	14.5	12	4	10	96	25070.0010
12	40	6.5	M5	14.5	12	4	12	93	25070.0012
14	45	9.0	M6	16.5	13	5	14	125	25070.0014
15	45	9.0	M6	16.5	13	5	15	122	25070.0015
16	45	9.0	M6	16.5	13	5	16	119	25070.0016
18	50	9.0	M6	18.5	13	5	18	151	25070.0018
20	50	9.0	M6	18.5	13	5	20	144	25070.0020
22	65	13.0	M8	23.5	18	6	22	359	25070.0022
24	65	13.0	M8	23.5	18	6	24	349	25070.0024
25	65	13.0	M8	23.5	18	6	25	345	25070.0025
30	75	13.0	M8	27.0	20	6	30	505	25070.0030
32	80	13.0	M8	30.0	20	6	32	588	25070.0032
35	80	13.0	M8	30.0	20	6	35	566	25070.0035
divided – picture 2									
10	40	6.5	M5	14.5	12	4	10	94	25070.0110
12	40	6.5	M5	14.5	12	4	12	90	25070.0112
14	45	9.0	M6	16.5	13	5	14	114	25070.0114
15	45	9.0	M6	16.5	13	5	15	112	25070.0115
16	45	9.0	M6	16.5	13	5	16	110	25070.0116
18	50	9.0	M6	18.5	13	5	18	142	25070.0118
20	50	9.0	M6	18.5	13	5	20	139	25070.0120
22	65	13.0	M8	23.5	18	6	22	341	25070.0122
24	65	13.0	M8	23.5	18	6	24	330	25070.0124

chanhvinh.com

Dimensions						WS	D_1 h11		Art. No.
d_1 H8	d_2 -0.5	d_3	d_4	l	s				
[mm]						[mm]	[mm]	[g]	
25	65	13.0	M8	23.5	18	6	25	330	25070.0125
30	75	13.0	M8	27.0	20	6	30	488	25070.0130
32	80	13.0	M8	30.0	20	6	32	564	25070.0132
35	80	13.0	M8	30.0	20	6	35	542	25070.0135

Application example

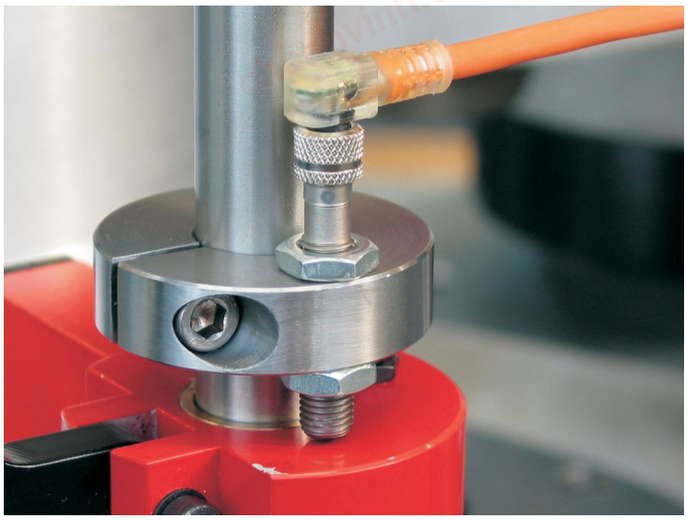

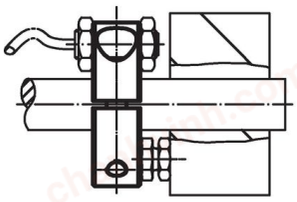

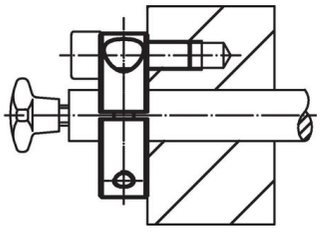

Compliance

For detailed compliance information please select the desired article number.