chanhvinh.com



# Tapered Shaft Hubs • without lock nut

## EH 25050.

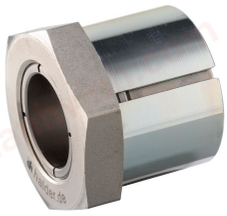

### Product Description

By using tapered shaft hubs, all shaft-hub joints of machine elements such as sprocket wheels, gear wheels, belt pulleys, cams, levers etc. can be easily and efficiently established.
It is a self-centering and non-floating tapered shaft hub in corrosion-protected design with a hexagon nut.
The rotational accuracy of the tapered shaft hubs is 0,03 mm.

#### Material

**External part**
- Steel, zinc-plated by galvanization

**Inner part**
- Steel, nickel-plated

**Nut**
- Steel, nickel-plated

**More information**

#### References

Comply with mounting instructions, mounting examples, and technical data.

### Drawing

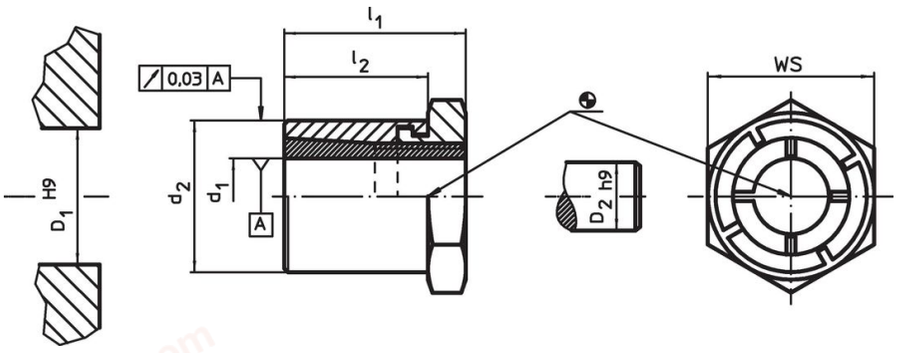


### Order information

| Dimensions $d_1$ | $d_2$ | $l_1$ | $l_2$ | WS | Tightening torque of the nut $T_A$ max. | Transferable torque M max. | Transferable axial load $F_a$ max. | Surface pressure of shaft $p_W$ max. | Surface pressure of hub $p_N$ max. | Hub bore $D_1$ H9 | Shaft diameter $D_2$ h9 | | Art. No. |
|---|---|---|---|---|---|---|---|---|---|---|---|---|---|
| [mm] | | | | [mm] | [Nm] | [Nm] | [kN] | [N/mm²] | [N/mm²] | [mm] | [mm] | [g] | |
| 5 | 14 | 19 | 15 | 14 | 9.9 | 10.1 | 4.0 | 264 | 96 | 14 | 5 | 18 | 25050.0005 |
| 6 | 14 | 19 | 15 | 14 | 9.9 | 12.1 | 4.0 | 220 | 96 | 14 | 6 | 17 | 25050.0006 |
| 8 | 16 | 22 | 17 | 16 | 16.9 | 23.4 | 5.8 | 179 | 91 | 16 | 8 | 24 | 25050.0008 |
| 9 | 20 | 24 | 19 | 22 | 34.9 | 43.7 | 9.7 | 245 | 115 | 20 | 9 | 47 | 25050.0009 |
| 10 | 20 | 24 | 19 | 22 | 34.9 | 48.6 | 9.7 | 221 | 115 | 20 | 10 | 44 | 25050.0010 |
| 11 | 22 | 24 | 19 | 22 | 43.8 | 59.9 | 10.9 | 225 | 117 | 22 | 11 | 51 | 25050.0011 |
| 12 | 22 | 24 | 19 | 22 | 43.8 | 65.3 | 10.9 | 206 | 117 | 22 | 12 | 47 | 25050.0012 |
| 14 | 26 | 28 | 22 | 27 | 65.0 | 93.0 | 13.3 | 178 | 99 | 26 | 14 | 80 | 25050.0014 |
| 15 | 26 | 28 | 22 | 27 | 65.0 | 99.0 | 13.3 | 166 | 99 | 26 | 15 | 76 | 25050.0015 |
| 16 | 26 | 28 | 22 | 27 | 65.0 | 106.0 | 13.3 | 156 | 99 | 26 | 16 | 71 | 25050.0016 |
| 18 | 35 | 36 | 27 | 36 | 161.0 | 223.0 | 24.8 | 224 | 125 | 35 | 18 | 197 | 25050.0018 |
| 19 | 35 | 36 | 27 | 36 | 161.0 | 235.0 | 24.8 | 212 | 125 | 35 | 19 | 189 | 25050.0019 |
| 20 | 35 | 36 | 27 | 36 | 161.0 | 248.0 | 24.8 | 201 | 125 | 35 | 20 | 181 | 25050.0020 |
| 22 | 42 | 41 | 30 | 46 | 250.0 | 349.0 | 31.8 | 197 | 110 | 42 | 22 | 344 | 25050.0022 |
| 24 | 42 | 41 | 30 | 46 | 250.0 | 381.0 | 31.8 | 180 | 110 | 42 | 24 | 320 | 25050.0024 |
| 25 | 42 | 41 | 30 | 46 | 250.0 | 397.0 | 31.8 | 173 | 110 | 42 | 25 | 309 | 25050.0025 |
| 28 | 47 | 44 | 33 | 50 | 355.0 | 565.0 | 40.4 | 174 | 110 | 47 | 28 | 402 | 25050.0028 |
| 30 | 47 | 44 | 33 | 50 | 355.0 | 605.0 | 40.4 | 162 | 110 | 47 | 30 | 371 | 25050.0030 |
| 32 | 55 | 51 | 38 | 55 | 490.0 | 764.0 | 47.8 | 166 | 102 | 55 | 32 | 626 | 25050.0032 |
| 35 | 55 | 51 | 38 | 55 | 490.0 | 836.0 | 47.8 | 151 | 102 | 55 | 35 | 564 | 25050.0035 |
| 38 | 62 | 58 | 43 | 65 | 720.0 | 1179.0 | 62.1 | 159 | 111 | 62 | 38 | 893 | 25050.0038 |
| 40 | 62 | 58 | 43 | 65 | 720.0 | 1241.0 | 62.1 | 151 | 111 | 62 | 40 | 841 | 25050.0040 |

chanhvinh.com



## Accessories

| | WS [mm] | | Art. No. |
|---|---|---|---|
| **special fork wrench** | | | |
|  | **14** | 45.0 g | 25050.0814 |
| | **16** | 72.0 g | 25050.0816 |
| | **22** | 195.0 g | 25050.0822 |
| | **27** | 195.0 g | 25050.0827 |
| | **36** | 428.0 g | 25050.0836 |
| | **46** | 610.0 g | 25050.0846 |
| | **50** | 870.0 g | 25050.0850 |
| | **55** | 1.1 kg | 25050.0855 |
| | **65** | 1.1 kg | 25050.0865 |

## Application example

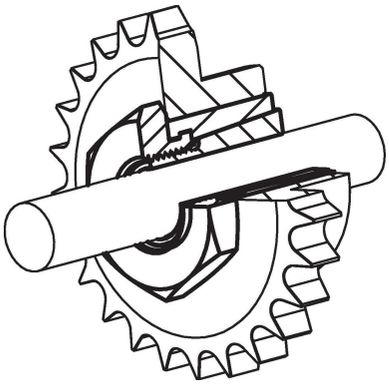

## Compliance

For detailed compliance information please select the desired article number.