chanhvinh.com

High Knurled Thumb Screws • DIN 464

EH 24790.



Product Description

Knurled thumb screws are very versatile. Three material versions for the different requirements
- steel, blackened
- steel, zinc-plated by galvanization
- stainless steel

are available.
Knurled thumb screws can be easily tightened and released by hand. The ribbed outer surface of the nut prevents slipping when tightening / releasing with the fingers.
Knurled screws are one-piece manufactured. Contrary to the Standard Sheet, they are generally manufactured with a thread up to the head and with runout without undercut at the end of the thread. The screws can therefore not be screwed in up to the collar.

Material

- Steel, blackened, quality 5.8
- Steel, zinc-plated by galvanization, quality 5.8
- Stainless steel 1.4305, dull blasted

More information

Notes

Knurling pitch and knurling depth may differ from DIN.

Further products

- Flat Knurled Thumb Screws, DIN 653

Drawing

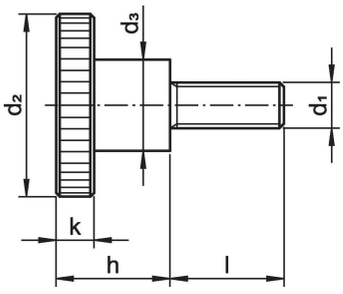

Order information

Dimensions							Art. No.
d_1	l	d_2	d_3	h	k	[g]	
			[mm]				
Steel, blackened, quality 5.8							
M 3	**6**	12	6	7.5	2.5	3.7	24790.0074
M 3	**10**	12	6	7.5	2.5	3.8	24790.0076
M 3	**12**	12	6	7.5	2.5	4.0	24790.0077
M 3	**16**	12	6	7.5	2.5	4.0	24790.0079
M 3	**20**	12	6	7.5	2.5	4.5	24790.0081
M 4	**5**	16	8	9.5	3.5	7.7	24790.0092
M 4	**8**	16	8	9.5	3.5	8.0	24790.0094
M 4	**10**	16	8	9.5	3.5	8.1	24790.0095
M 4	**12**	16	8	9.5	3.5	8.6	24790.0096
M 4	**16**	16	8	9.5	3.5	8.4	24790.0098
M 4	**20**	16	8	9.5	3.5	9.1	24790.0100
M 4	**25**	16	8	9.5	3.5	9.0	24790.0102
M 5	**6**	20	10	11.5	4.0	14.0	24790.0112
M 5	**8**	20	10	11.5	4.0	15.0	24790.0113
M 5	**10**	20	10	11.5	4.0	15.0	24790.0114
M 5	**12**	20	10	11.5	4.0	15.0	24790.0115
M 5	**16**	20	10	11.5	4.0	16.0	24790.0117
M 5	**20**	20	10	11.5	4.0	16.0	24790.0119
M 5	**25**	20	10	11.5	4.0	17.0	24790.0121
M 5	**30**	20	10	11.5	4.0	17.0	24790.0123
M 6	**8**	24	12	15.0	5.0	28.0	24790.0132
M 6	**10**	24	12	15.0	5.0	27.0	24790.0133
M 6	**12**	24	12	15.0	5.0	28.0	24790.0134

chanhvinh.com

Dimensions							Art. No.
d_1	l	d_2	d_3	h	k		
[mm]						[g]	
M 6	**16**	24	12	15.0	5.0	28.0	24790.0136
M 6	**20**	24	12	15.0	5.0	29.0	24790.0138
M 6	**25**	24	12	15.0	5.0	30.0	24790.0140
M 6	**30**	24	12	15.0	5.0	31.0	24790.0142
M 6	**35**	24	12	15.0	5.0	31.0	24790.0144
M 8	**12**	30	16	18.0	6.0	53.0	24790.0152
M 8	**16**	30	16	18.0	6.0	55.0	24790.0154
M 8	**20**	30	16	18.0	6.0	56.0	24790.0156
M 8	**25**	30	16	18.0	6.0	58.0	24790.0158
M 8	**30**	30	16	18.0	6.0	60.0	24790.0160
M 8	**35**	30	16	18.0	6.0	62.0	24790.0162
M 8	**40**	30	16	18.0	6.0	61.0	24790.0164
M10	**15**	36	20	23.0	8.0	104.0	24790.0171
M10	**20**	36	20	23.0	8.0	106.0	24790.0173
M10	**25**	36	20	23.0	8.0	109.0	24790.0175
M10	**30**	36	20	23.0	8.0	112.0	24790.0177
M10	**35**	36	20	23.0	8.0	116.0	24790.0179
M10	**40**	36	20	23.0	8.0	116.0	24790.0181
Steel, zinc-plated by galvanization							
M 3	**6**	12	6	7.5	2.5	3.5	24790.0474
M 3	**8**	12	6	7.5	2.5	3.6	24790.0475
M 3	**10**	12	6	7.5	2.5	3.7	24790.0476
M 3	**12**	12	6	7.5	2.5	3.8	24790.0477
M 3	**16**	12	6	7.5	2.5	4.0	24790.0479
M 3	**20**	12	6	7.5	2.5	4.1	24790.0481
M 4	**5**	16	8	9.5	3.5	8.2	24790.0492
M 4	**8**	16	8	9.5	3.5	8.3	24790.0494
M 4	**10**	16	8	9.5	3.5	8.5	24790.0495
M 4	**12**	16	8	9.5	3.5	8.5	24790.0496
M 4	**16**	16	8	9.5	3.5	8.8	24790.0498
M 4	**20**	16	8	9.5	3.5	9.1	24790.0500
M 4	**25**	16	8	9.5	3.5	9.6	24790.0502
M 5	**6**	20	10	11.5	4.0	15.0	24790.0512
M 5	**8**	20	10	11.5	4.0	15.0	24790.0513
M 5	**10**	20	10	11.5	4.0	15.0	24790.0514
M 5	**12**	20	10	11.5	4.0	16.0	24790.0515
M 5	**16**	20	10	11.5	4.0	16.0	24790.0517
M 5	**20**	20	10	11.5	4.0	16.0	24790.0519
M 5	**25**	20	10	11.5	4.0	17.0	24790.0521
M 5	**30**	20	10	11.5	4.0	18.0	24790.0523
M 6	**8**	24	12	15.0	5.0	27.0	24790.0532
M 6	**10**	24	12	15.0	5.0	27.0	24790.0533
M 6	**12**	24	12	15.0	5.0	28.0	24790.0534
M 6	**16**	24	12	15.0	5.0	29.0	24790.0536
M 6	**20**	24	12	15.0	5.0	29.0	24790.0538
M 6	**25**	24	12	15.0	5.0	30.0	24790.0540
M 6	**30**	24	12	15.0	5.0	31.0	24790.0542
M 6	**35**	24	12	15.0	5.0	32.0	24790.0544
M 8	**12**	30	16	18.0	6.0	54.0	24790.0552
M 8	**16**	30	16	18.0	6.0	55.0	24790.0554
M 8	**20**	30	16	18.0	6.0	57.0	24790.0556
M 8	**25**	30	16	18.0	6.0	58.0	24790.0558
M 8	**30**	30	16	18.0	6.0	60.0	24790.0560
M 8	**35**	30	16	18.0	6.0	62.0	24790.0562
M 8	**40**	30	16	18.0	6.0	63.0	24790.0564
M10	**12**	36	20	23.0	8.0	104.0	24790.0570
M10	**15**	36	20	23.0	8.0	106.0	24790.0571
M10	**20**	36	20	23.0	8.0	107.0	24790.0573
M10	**25**	36	20	23.0	8.0	111.0	24790.0575
M10	**30**	36	20	23.0	8.0	112.0	24790.0577
M10	**35**	36	20	23.0	8.0	115.0	24790.0579
M10	**40**	36	20	23.0	8.0	117.0	24790.0581

chanhvinh.com

Dimensions							Art. No.
d_1	l	d_2	d_3	h	k	[g]	
			[mm]				
Stainless steel 1.4305							
M 3	**6**	12	6	7.5	2.5	4.0	24790.0274
M 3	**10**	12	6	7.5	2.5	4.0	24790.0276
M 3	**12**	12	6	7.5	2.5	4.1	24790.0277
M 3	**16**	12	6	7.5	2.5	3.8	24790.0279
M 4	**8**	16	8	9.5	3.5	8.0	24790.0294
M 4	**10**	16	8	9.5	3.5	8.0	24790.0295
M 4	**12**	16	8	9.5	3.5	8.8	24790.0296
M 4	**16**	16	8	9.5	3.5	8.8	24790.0298
M 4	**20**	16	8	9.5	3.5	9.0	24790.0300
M 4	**25**	16	8	9.5	3.5	10.0	24790.0302
M 5	**10**	20	10	11.5	4.0	15.0	24790.0314
M 5	**12**	20	10	11.5	4.0	15.0	24790.0315
M 5	**16**	20	10	11.5	4.0	16.0	24790.0317
M 5	**20**	20	10	11.5	4.0	16.0	24790.0319
M 5	**25**	20	10	11.5	4.0	17.0	24790.0321
M 5	**30**	20	10	11.5	4.0	17.0	24790.0323
M 6	**12**	24	12	15.0	5.0	28.0	24790.0334
M 6	**16**	24	12	15.0	5.0	29.0	24790.0336
M 6	**20**	24	12	15.0	5.0	5.2	24790.0338
M 6	**25**	24	12	15.0	5.0	30.0	24790.0340
M 6	**30**	24	12	15.0	5.0	31.0	24790.0342
M 6	**35**	24	12	15.0	5.0	31.0	24790.0344
M 8	**16**	30	16	18.0	6.0	56.0	24790.0354
M 8	**20**	30	16	18.0	6.0	57.0	24790.0356
M 8	**25**	30	16	18.0	6.0	59.0	24790.0358
M 8	**30**	30	16	18.0	6.0	60.0	24790.0360
M 8	**35**	30	16	18.0	6.0	60.0	24790.0362

Application example

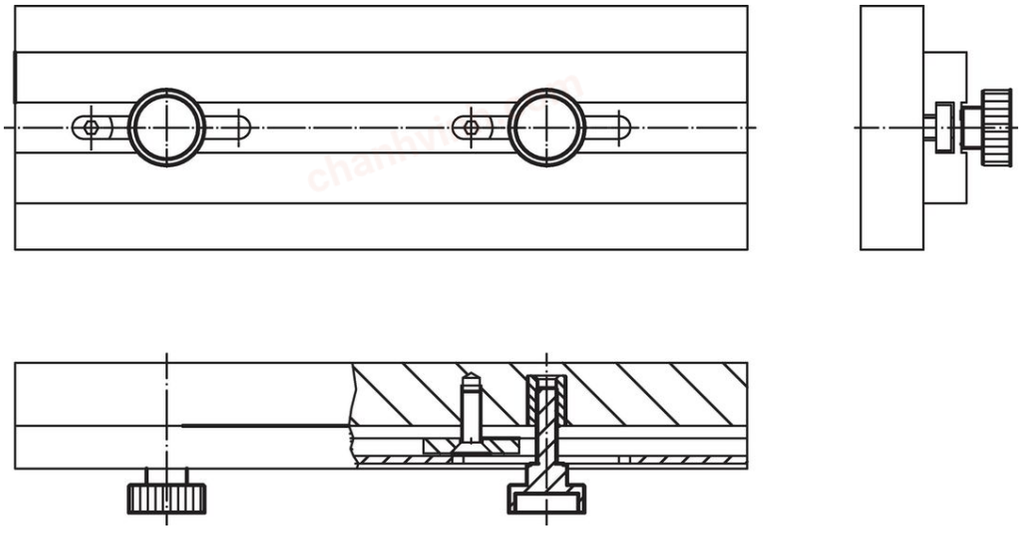

Compliance

For detailed compliance information please select the desired article number.