chanhvinh.com



# Star Grips • plastic
## EH 24750.



## Product Description

### Material

**Cap**
- Thermoplastic PA, black similar to RAL 9005
- Thermoplastic PA, white similar to RAL 9019
- Thermoplastic PA, orange similar to RAL 2004
- Thermoplastic PA, yellow similar to RAL 1016
- Thermoplastic PA, blue similar to RAL 5015

**Handle**
- Thermoplastic PA 6, black similar to RAL 9005

**Threaded bushing**
- Stainless steel

**More information**

### Notes

Customized designs, e.g. differing threads, on request.

## Drawing

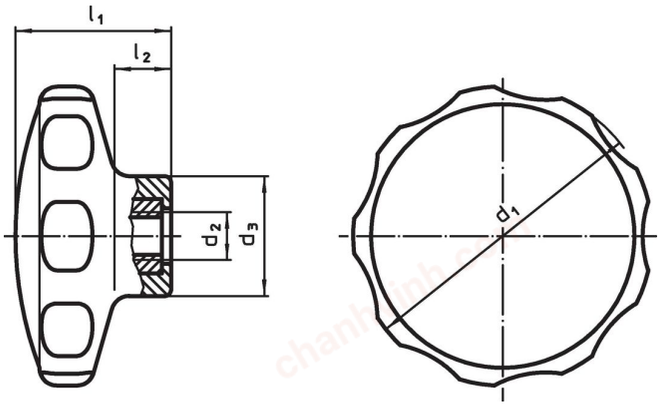


## Order information

| Dimensions | | | | | | | | Art. No. |
|---|---|---|---|---|---|---|---|---|
| $d_1$ | $d_2$ | $d_3$ | $l_1$ | $l_2$ | min. | max. | | |
| [mm] | | | | | [°C] | | [g] | |
| **black** | | | | | | | | |
| **30** | **M 4** | 14.0 | 19 | 7 | -30 | 80 | 5.5 | 24750.0030 |
| **30** | **M 5** | 14.0 | 19 | 7 | -30 | 80 | 33.0 | 24750.0035 |
| **40** | **M 5** | 16.5 | 22 | 9 | -30 | 80 | 8.2 | 24750.0040 |
| **40** | **M 6** | 16.5 | 22 | 9 | -30 | 80 | 9.5 | 24750.0045 |
| **50** | **M 6** | 22.0 | 26 | 10 | -30 | 80 | 16.0 | 24750.0050 |
| **50** | **M 8** | 22.0 | 26 | 10 | -30 | 80 | 19.0 | 24750.0055 |
| **62** | **M 8** | 22.0 | 35 | 13 | -30 | 80 | 30.0 | 24750.0060 |
| **62** | **M10** | 22.0 | 35 | 13 | -30 | 80 | 39.0 | 24750.0065 |
| **white** | | | | | | | | |
| **30** | **M 4** | 14.0 | 19 | 7 | -30 | 80 | 5.3 | 24750.0031 |
| **30** | **M 5** | 14.0 | 19 | 7 | -30 | 80 | 5.7 | 24750.0036 |
| **40** | **M 5** | 16.5 | 22 | 9 | -30 | 80 | 8.2 | 24750.0041 |
| **40** | **M 6** | 16.5 | 22 | 9 | -30 | 80 | 9.4 | 24750.0046 |
| **50** | **M 6** | 22.0 | 26 | 10 | -30 | 80 | 16.0 | 24750.0051 |
| **50** | **M 8** | 22.0 | 26 | 10 | -30 | 80 | 19.0 | 24750.0056 |
| **62** | **M 8** | 22.0 | 35 | 13 | -30 | 80 | 30.0 | 24750.0061 |
| **62** | **M10** | 22.0 | 35 | 13 | -30 | 80 | 39.0 | 24750.0066 |

chanhvinh.com



| Dimensions | | | | | | | | Art. No. |
|---|---|---|---|---|---|---|---|---|
| $d_1$ | $d_2$ | $d_3$ | $l_1$ | $l_2$ | min. | max. | | |
| [mm] | | | | | [°C] | | [g] | |
| **orange** | | | | | | | | |
| **30** | **M 4** | 14.0 | 19 | 7 | -30 | 80 | 5.3 | 24750.0032 |
| **30** | **M 5** | 14.0 | 19 | 7 | -30 | 80 | 5.7 | 24750.0037 |
| **40** | **M 5** | 16.5 | 22 | 9 | -30 | 80 | 8.2 | 24750.0042 |
| **40** | **M 6** | 16.5 | 22 | 9 | -30 | 80 | 9.5 | 24750.0047 |
| **50** | **M 6** | 22.0 | 26 | 10 | -30 | 80 | 16.0 | 24750.0052 |
| **50** | **M 8** | 22.0 | 26 | 10 | -30 | 80 | 19.0 | 24750.0057 |
| **62** | **M 8** | 22.0 | 35 | 13 | -30 | 80 | 19.0 | 24750.0062 |
| **62** | **M10** | 22.0 | 35 | 13 | -30 | 80 | 39.0 | 24750.0067 |
| **yellow** | | | | | | | | |
| **30** | **M 4** | 14.0 | 19 | 7 | -30 | 80 | 5.3 | 24750.0033 |
| **30** | **M 5** | 14.0 | 19 | 7 | -30 | 80 | 5.7 | 24750.0038 |
| **40** | **M 5** | 16.5 | 22 | 9 | -30 | 80 | 8.2 | 24750.0043 |
| **40** | **M 6** | 16.5 | 22 | 9 | -30 | 80 | 9.5 | 24750.0048 |
| **50** | **M 6** | 22.0 | 26 | 10 | -30 | 80 | 16.0 | 24750.0053 |
| **50** | **M 8** | 22.0 | 26 | 10 | -30 | 80 | 19.0 | 24750.0058 |
| **62** | **M 8** | 22.0 | 35 | 13 | -30 | 80 | 19.0 | 24750.0063 |
| **62** | **M10** | 22.0 | 35 | 13 | -30 | 80 | 39.0 | 24750.0068 |
| **blue** | | | | | | | | |
| **30** | **M 4** | 14.0 | 19 | 7 | -30 | 80 | 5.3 | 24750.0034 |
| **30** | **M 5** | 14.0 | 19 | 7 | -30 | 80 | 5.7 | 24750.0039 |
| **40** | **M 5** | 16.5 | 22 | 9 | -30 | 80 | 8.2 | 24750.0044 |
| **40** | **M 6** | 16.5 | 22 | 9 | -30 | 80 | 9.5 | 24750.0049 |
| **50** | **M 6** | 22.0 | 26 | 10 | -30 | 80 | 16.0 | 24750.0054 |
| **50** | **M 8** | 22.0 | 26 | 10 | -30 | 80 | 19.0 | 24750.0059 |
| **62** | **M 8** | 22.0 | 35 | 13 | -30 | 80 | 33.0 | 24750.0064 |
| **62** | **M10** | 22.0 | 35 | 13 | -30 | 80 | 39.0 | 24750.0069 |

## Compliance

For detailed compliance information please select the desired article number.