chanhvinh.com

Star Grip Screws • similar to DIN 6336, stainless steel A4

EH 24741.



Product Description

These star grip screws are manufactured according to DIN 6336, but it is a version without dirty edges. This makes these star grip screws suitable for all areas of application with high hygienic requirements.
The stainless steel A4 version ensures maximum corrosion resistance.

Material

Handle
- Stainless steel 1.4408, precision casting, polished

Screw
- Stainless steel A4

Drawing

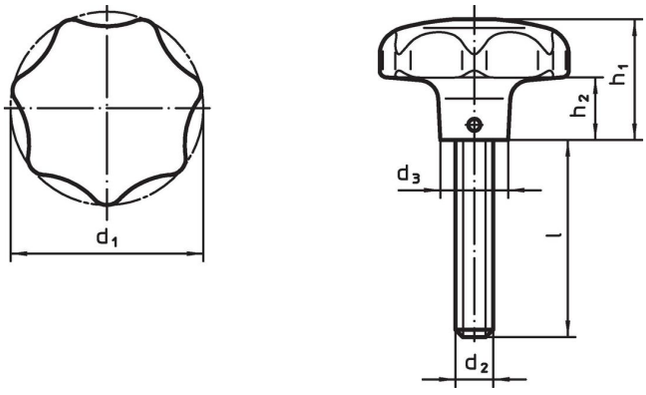

Order information

Dimensions							Art. No.
d_1	d_2	l	d_3	h_1	h_2	[g]	
		[mm]					
40	**M 8**	**20**	14	25	12	118	**24741.0105**
40	**M 8**	**25**	14	25	12	115	**24741.0110**
40	**M 8**	**30**	14	25	12	120	**24741.0115**
40	**M 8**	**40**	14	25	12	124	**24741.0120**
50	**M10**	**20**	18	32	15	229	**24741.0125**
50	**M10**	**25**	18	32	15	232	**24741.0130**
50	**M10**	**30**	18	32	15	234	**24741.0135**
50	**M10**	**45**	18	32	15	242	**24741.0140**
50	**M10**	**55**	18	32	15	252	**24741.0145**
63	**M12**	**30**	20	40	19	429	**24741.0150**
63	**M12**	**40**	20	40	19	435	**24741.0155**
63	**M12**	**50**	20	40	19	442	**24741.0160**

Compliance

For detailed compliance information please select the desired article number.