chanhvinh.com

Star Grip Screws • similar to DIN 6336, stainless steel

EH 24741.



Product Description

These star grip screws are manufactured according to DIN 6336, but it is a version without dirty edges. This makes these star grip screws suitable for all areas of application with high hygienic requirements.

Material

Handle
- Stainless steel 1.4308, precision casting, matt blasted

Screw
- Stainless steel 1.4305

Drawing

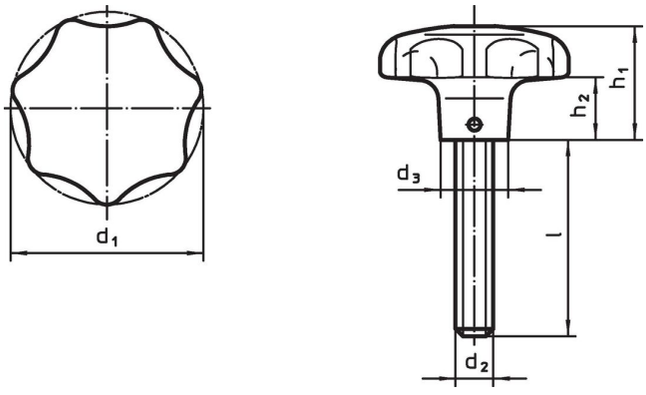

Order information

Dimensions							Art. No.
d_1	d_2	l ~	d_3	h_1	h_2		
[mm]						[g]	
40	**M 8**	**20**	14	25	12	89	24741.0005
40	**M 8**	**25**	14	25	12	87	24741.0010
40	**M 8**	**30**	14	25	12	97	24741.0015
40	**M 8**	**40**	14	25	12	93	24741.0020
50	**M10**	**20**	18	32	15	171	24741.0025
50	**M10**	**25**	18	32	15	172	24741.0030
50	**M10**	**30**	18	32	15	177	24741.0035
50	**M10**	**45**	18	32	15	187	24741.0040
50	**M10**	**55**	18	32	15	194	24741.0045
63	**M12**	**30**	20	40	19	343	24741.0050
63	**M12**	**40**	20	40	19	338	24741.0055
63	**M12**	**50**	20	40	19	329	24741.0060

Compliance

For detailed compliance information please select the desired article number.