chanhvinh.com

Palm Grip Screws • similar to DIN 6335, stainless steel A4

EH 24731.



Product Description

These grub screws with palm grip are manufactured according to DIN 6335, but it is a version without dirty edges. This makes these grub screws with palm grip suitable for all areas of application with high hygienic requirements.
The stainless steel A4 version ensures maximum corrosion resistance.

Material

Handle
- Stainless steel A4, polished

Screw
- Stainless steel A4

Drawing

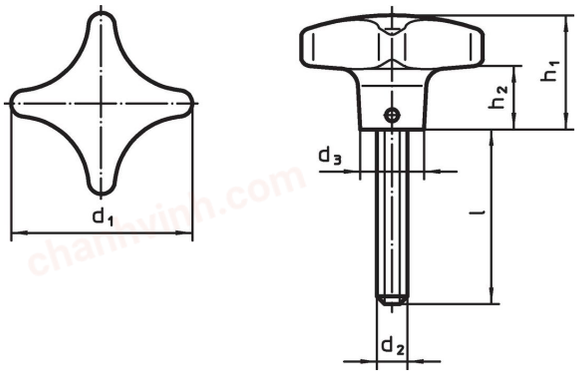

Order information

Dimensions							Art. No.
d_1	d_2	l	d_3	h_1	h_2		
[mm]						[g]	
40	**M 8**	**20**	14	25	13	73	**24731.0105**
40	**M 8**	**25**	14	25	13	75	**24731.0110**
40	**M 8**	**30**	14	25	13	76	**24731.0115**
40	**M 8**	**40**	14	25	13	80	**24731.0120**
50	**M10**	**20**	18	32	18	132	**24731.0125**
50	**M10**	**25**	18	32	18	136	**24731.0130**
50	**M10**	**30**	18	32	18	137	**24731.0135**
50	**M10**	**45**	18	32	18	144	**24731.0140**
50	**M10**	**55**	18	32	18	152	**24731.0145**
63	**M12**	**30**	20	40	23	248	**24731.0150**
63	**M12**	**40**	20	40	23	256	**24731.0155**
63	**M12**	**50**	20	40	23	263	**24731.0160**

Compliance

For detailed compliance information please select the desired article number.