chanhvinh.com

Palm Grip Screws · similar to DIN 6335, stainless steel

EH 24731.



Product Description

These grub screws with palm grip are manufactured according to DIN 6335, but it is a version without dirty edges. This makes these grub screws with palm grip suitable for all areas of application with high hygienic requirements.

Material

Handle
- stainless steel, dull blasted

Screw
- Stainless steel 1.4305

Drawing

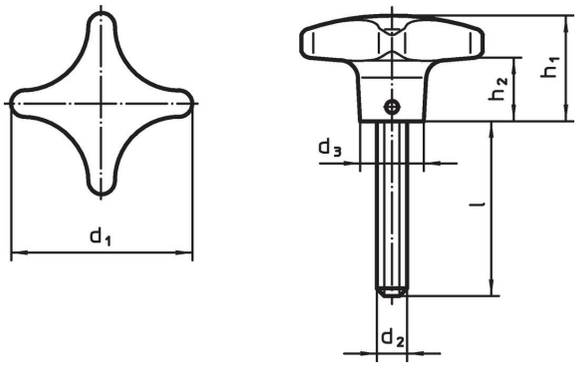

Order information

Dimensions							Art. No.
d_1	d_2	l ~	d_3	h_1	h_2		
[mm]						[g]	
40	**M 8**	**20**	14	25	13	76	24731.0005
40	**M 8**	**25**	14	25	13	70	24731.0010
40	**M 8**	**30**	14	25	13	70	24731.0015
40	**M 8**	**40**	14	25	13	82	24731.0020
50	**M10**	**20**	18	32	18	135	24731.0025
50	**M10**	**25**	18	32	18	138	24731.0030
50	**M10**	**30**	18	32	18	138	24731.0035
50	**M10**	**45**	18	32	18	160	24731.0040
50	**M10**	**55**	18	32	18	149	24731.0045
63	**M12**	**30**	20	40	23	249	24731.0050
63	**M12**	**40**	20	40	23	240	24731.0055
63	**M12**	**50**	20	40	23	250	24731.0060

Compliance

For detailed compliance information please select the desired article number.