chanhvinh.com

Mounting Units • with star grips and spring return, captive
EH 24720.



Product Description

Mounting units are used in combination with operating elements for the indexing, locking and positioning of components.
They are particularly suitable for applications with threaded holes where components need to be positioned or released quickly, without tools and with a high degree of repeatability. This facilitates efficient handling and excellent process reliability.
Typical applications include mechanical engineering, plant construction, fixture and toolmaking, as well as assembly, manufacturing, transport and packaging systems.
Mounting units with star grip screws (EH 24740.) serve as connecting elements between operating Elements and components.
Components can be reliably positioned simply by pressing or screwing them into place, without the need for additional tools. The spring return allows smooth detachment and adjustment.
The design of the mounting unit helps prevent loss of the operating element. Repeatable positioning also ensures a high degree of process reliability.
These mounting units with star grip screws have the following features:

- The pre-assembled star grip screw can be individually replaced with other sizes and versions, depending on the application
- Suitable for indexing, locking and positioning components
- Tool-free operation for quick and efficient handling
- Captive solution with integrated return of the operating element
- Supports positioning with a high degree of repeatability and excellent process reliability

Material

Handle
- Thermosetting plastic PF 31, black similar to RAL 9005

Body
- Steel, zinc-plated by galvanization, passivated

Screw
- Steel, zinc-plated by galvanization

Spring
- Stainless Steel

Operation

Mounting:
1. Connect the fastening element to the component to be secured by pressing it in and simultaneously turning it clockwise.

Releasing:
1. Release the fastening element from the secured component by turning it counterclockwise.
2. The fastening element is returned to its initial position by spring force.

chanhvinh.com

Drawing

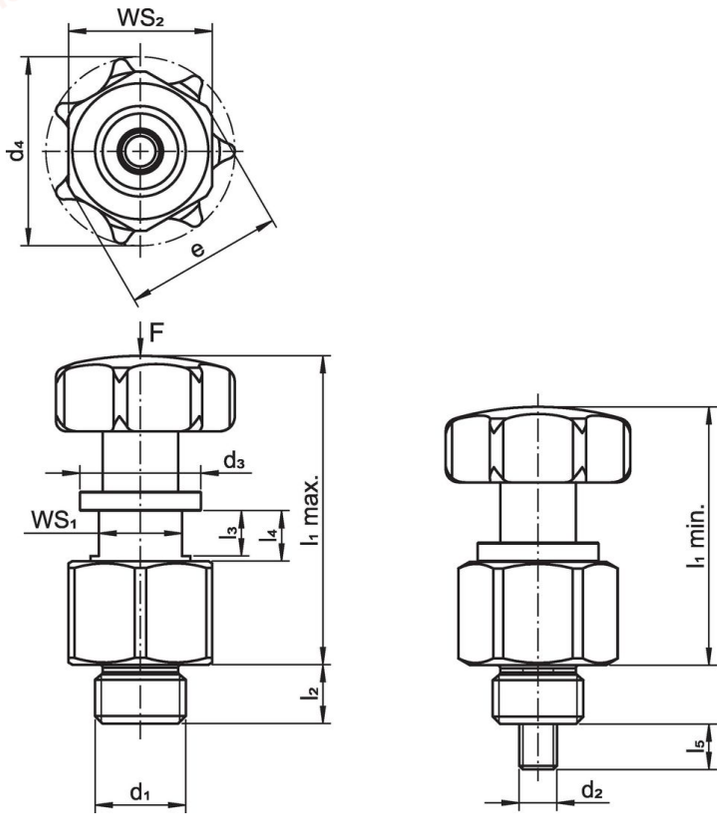

Order information

Dimensions											WS_1	WS_2	Clamping force	For screw		Art. No.
d_1	d_2	d_3	d_4	l_1 min.	l_1 max.	l_2	l_3	l_4 ~	l_5	e						
[mm]											[mm]	[mm]	[N]	[mm]	[g]	
M12 x 1,5	**M 5**	16	25	34.2	40.9	7.8	6.0	6.7	6	21.1	11	19	3.5	M 5	41	24720.2005
M12 x 1,5	**M 6**	16	32	36.2	42.9	7.8	6.0	6.7	6	21.1	11	19	3.5	M 6	46	24720.2006
M16 x 1,5	**M 8**	20	40	47.7	56.0	9.8	7.5	8.3	8	26.8	14	24	6.0	M 8	104	24720.2008
M16 x 1,5	**M10**	24	50	62.7	73.1	9.8	8.5	10.4	10	33.0	16	30	8.0	M10	201	24720.2010

Application example

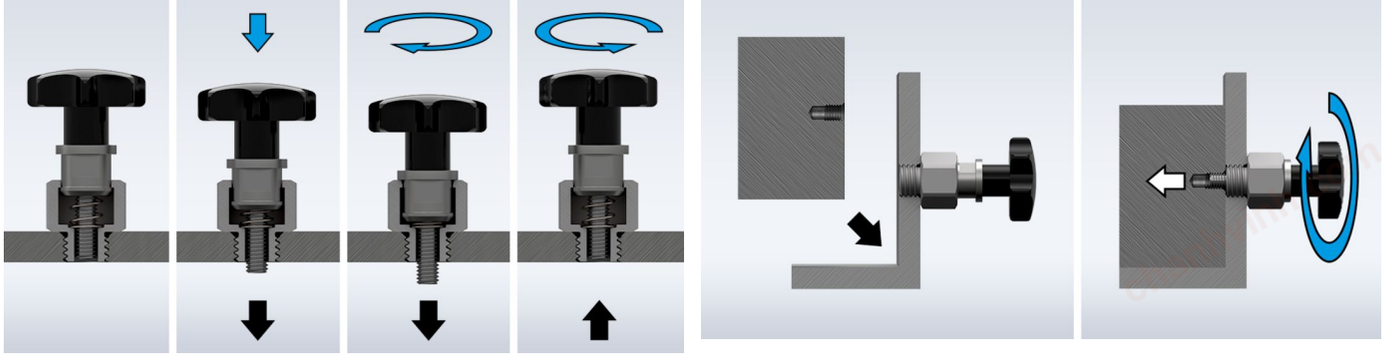

chanhvinh.com

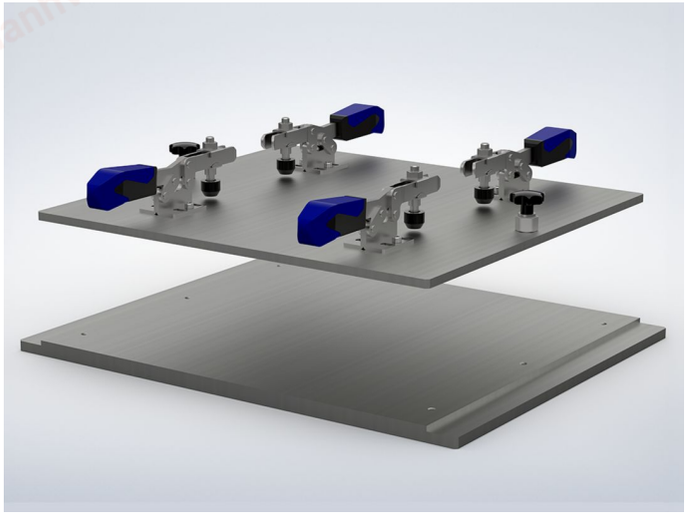

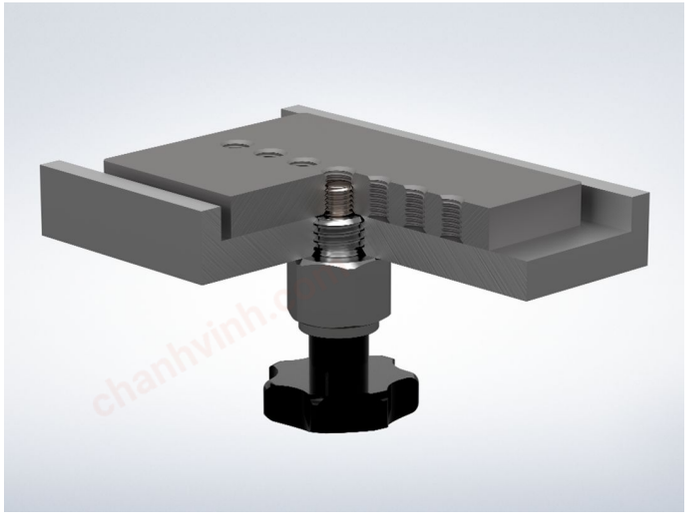

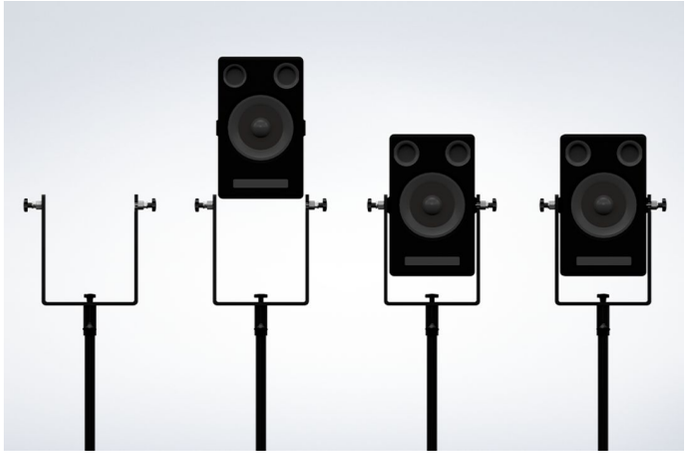

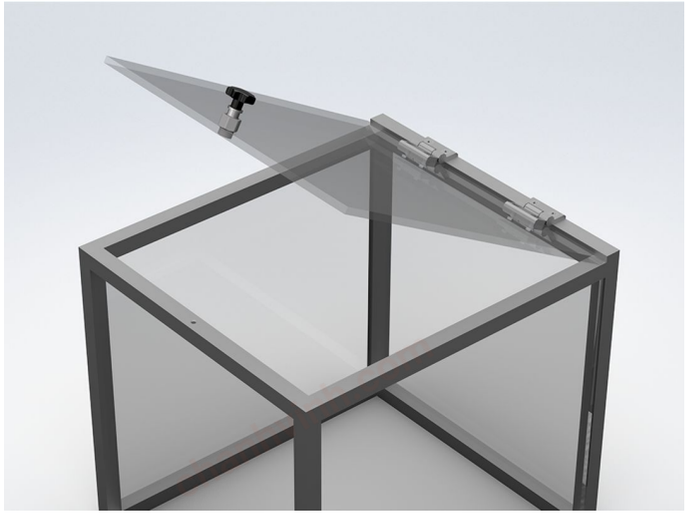

Compliance

RoHS-compliant
Compliant with Directive 2011/65/EU [RoHS].

Does not contain SVHC substances
No SVHC substances with more than 0.1% w/w contained - SVHC list [REACH] as of 04.02.2026.

SCIP-code
N/A

Does not contain Proposition 65 substances
No Proposition 65 substances included.
https://www.P65Warnings.ca.gov/

Free from Conflict Minerals
This product does not contain any substances designated as "conflict minerals" such as tantalum, tin, gold or tungsten from the Democratic Republic of Congo or adjacent countries.

POP-compliant
Contains no persistent organic pollutants – Stockholm Convention [POP] as of September 2025.

PFAS-compliant
Contains no per- and polyfluoroalkyl substances (PFAS).

TSCA-compliant
Agent concentration in this product does not exceed the specified threshold.