chanhvinh.com



# **Mounting Units** • modular, with spring return, captive
## EH 24720.



## Product Description

Mounting units are used in combination with operating elements for the indexing, locking and positioning of components.
They are particularly suitable for applications with threaded holes where components need to be positioned or released quickly, without tools and with a high degree of repeatability. This facilitates efficient handling and excellent process reliability.
Typical applications include mechanical engineering, plant construction, fixture and toolmaking, as well as assembly, manufacturing, transport and packaging systems.
Mounting units serve as connecting elements between operating elements (e.g. star grip screws, cross grip screws, knurled screws, clamping levers, etc.) and components.
Components can be reliably positioned simply by pressing or screwing them into place, without the need for additional tools. The spring return allows smooth detachment and adjustment.
The design of the mounting unit helps prevent loss of the operating element. Repeatable positioning also ensures a high degree of process reliability.
These mounting units have the following features:

- Flexible combination with various operating elements such as star grip screws, grub screws with palm grip, knurled screws, clamping levers or other attachments, depending on the application
- Suitable for indexing, locking and positioning components
- Tool-free operation for quick and efficient handling
- Captive solution with integrated return of the operating element
- Supports positioning with a high degree of repeatability and excellent process reliability

### Material

**Body**

- Steel, zinc-plated by galvanization, passivated

**Spring**

- Stainless Steel

### Assembly

Assembly:

1. Screw the mounting unit into the counterpart by hand.
2. Secure the mounting unit with an open-end wrench (max. 1/4 turn).
3. Screw the selected fastening element into the mounting unit by hand.
4. Tighten the connection with an open-end wrench while holding the handle to prevent it from turning.

Removal (only required if the mounting unit is to be removed completely):

1. Loosen the mounting unit with a fork wrench and unscrew it by hand

### Operation

Mounting:

1. Connect the fastening element to the component to be secured by pressing it in and simultaneously turning it clockwise.

Releasing:

1. Release the fastening element from the secured component by turning it counterclockwise.
2. The fastening element is returned to its initial position by spring force.

## More information

### Notes

If the thread of the mounting element exceeds dimension $l_3$, it will protrude from the handle recess. This must be taken into account during installation and operation.

### Further products

- Adjustable Clamping Levers, inner parts from stainless steel, with screw
- Adjustable Clamping Levers, with screw
- Adjustable Clamping Levers, with axial bearing, with screw
- Adjustable Clamping Levers, with axial bearing from stainless steel, with screw
- Adjustable Tension Levers
- Adjustable Flat Tension Levers, with screw

chanhvinh.com



- Adjustable Flat Tension Levers, with screw, stainless steel
- Flat Knurled Thumb Screws, DIN 653
- High Knurled Thumb Screws, DIN 464
- Star Grip Screws, Stainless steel
- Star Grip Screws, DIN 6336 plastic
- Star Grip Screws, similar to DIN 6336, stainless steel
- Star Grip Screws, similar to DIN 6336, stainless steel A4
- Star Grip Screws, plastic
- Palm Grip Screws, DIN 6335 plastic
- Palm Grip Screws, similar to DIN 6335, stainless steel
- Palm Grip Screws, similar to DIN 6335, stainless steel A4

## Drawing

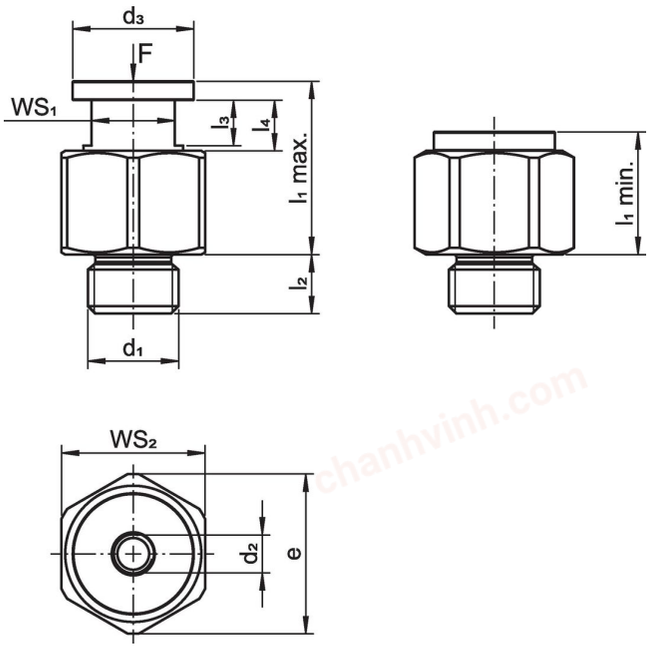





## Order information

| Dimensions | | | | | | | | | $WS_1$ | $WS_2$ | Clamping force | For screw | | Art. No. |
|---|---|---|---|---|---|---|---|---|---|---|---|---|---|---|
| $d_1$ | $d_2$ | $d_3$ | $l_1$ min. | $l_1$ max. | $l_2$ | $l_3$ | $l_4$ ~ | e | | | | | | |
| [mm] | | | | | | | | | [mm] | [mm] | [N] | [mm] | [g] | |
| **M12 x 1,5** | **M 5** | 16 | 16.2 | 23.0 | 7.8 | 6.0 | 6.7 | 21.1 | 11 | 19 | 3.5 | M 5 | 31 | 24720.0005 |
| **M12 x 1,5** | **M 6** | 16 | 16.2 | 23.0 | 7.8 | 6.0 | 6.7 | 21.1 | 11 | 19 | 3.5 | M 6 | 30 | 24720.0006 |
| **M16 x 1,5** | **M 8** | 20 | 22.7 | 31.0 | 9.8 | 7.5 | 8.3 | 26.8 | 14 | 24 | 6.0 | M 8 | 70 | 24720.0008 |
| **M16 x 1,5** | **M10** | 24 | 30.7 | 41.1 | 9.8 | 8.5 | 10.4 | 33.0 | 16 | 30 | 8.0 | M10 | 136 | 24720.0010 |

## Application example



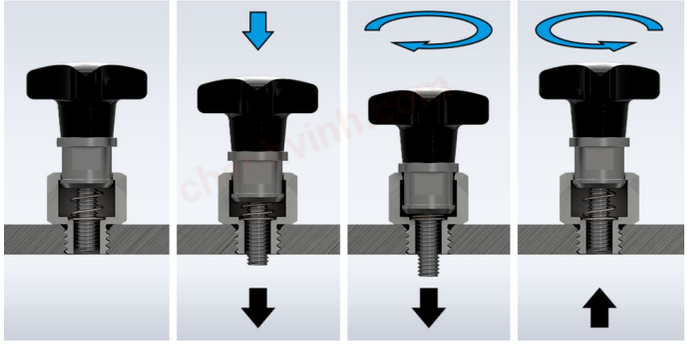

chanhvinh.com



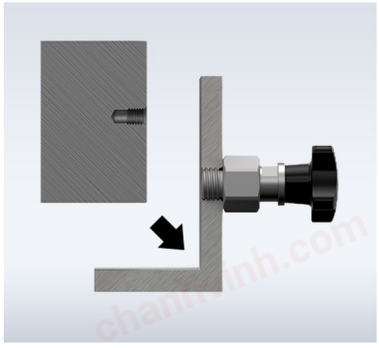

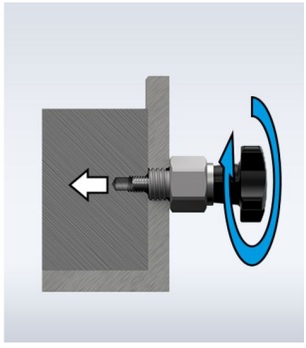

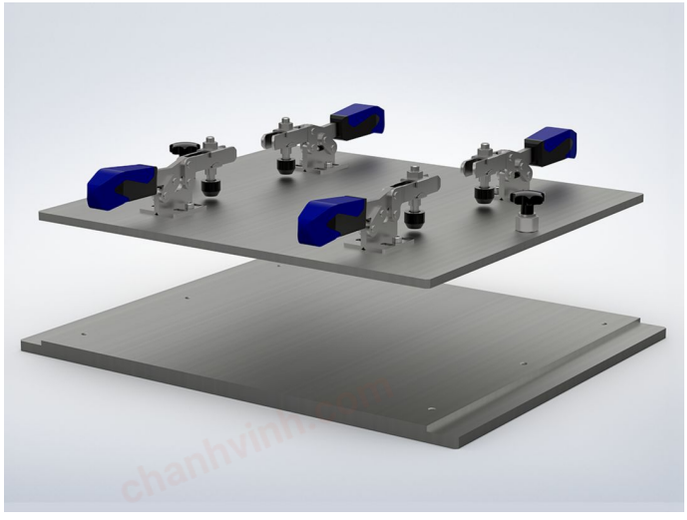

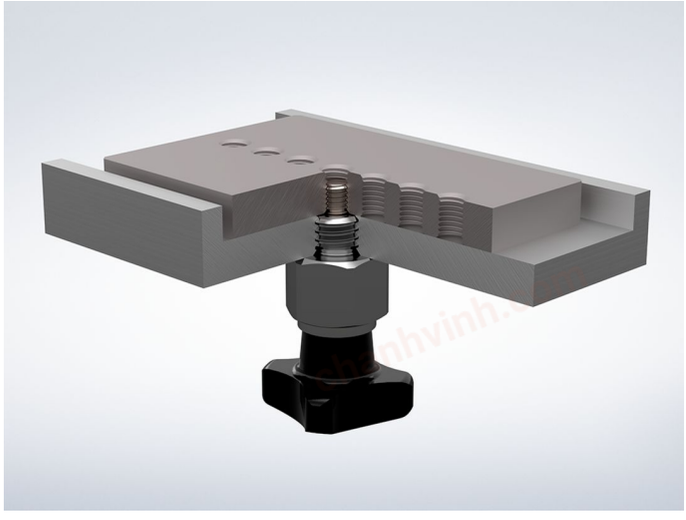



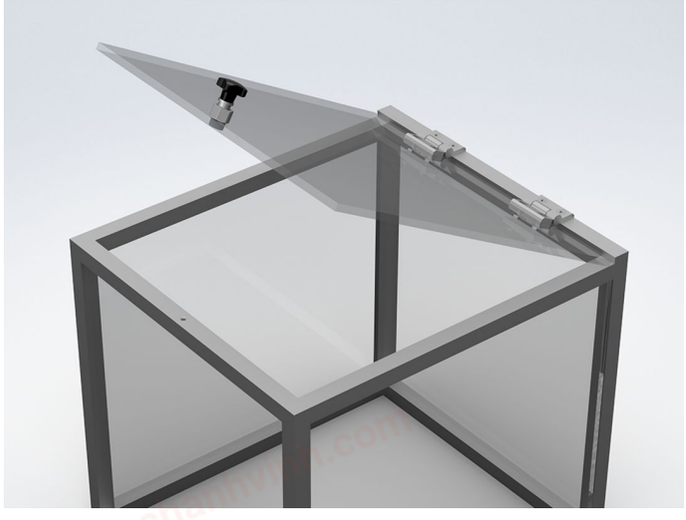

chanhvinh.com



## Compliance

**RoHS-compliant**
Compliant with Directive 2011/65/EU [RoHS].

**Does not contain SVHC substances**
No SVHC substances with more than 0.1% w/w contained - SVHC list [REACH] as of 04.02.2026.

**SCIP-code**
N/A

**Does not contain Proposition 65 substances**
No Proposition 65 substances included.
https://www.P65Warnings.ca.gov/

**Free from Conflict Minerals**
This product does not contain any substances designated as "conflict minerals" such as tantalum, tin, gold or tungsten from the Democratic Republic of Congo or adjacent countries.

**POP-compliant**
Contains no persistent organic pollutants – Stockholm Convention [POP] as of September 2025.

**PFAS-compliant**
Contains no per- and polyfluoroalkyl substances (PFAS).

**TSCA-compliant**
Agent concentration in this product does not exceed the specified threshold.