chanhvinh.com

Three-Lobed Torque Handles

EH 24711.



Product Description

Torque handles are used wherever a limitation of the exerted hand force is required.
The three-lobed torque handle with integrated torque mechanism allows a defined torque limit during tightening. Reaching the torque results in an "over-locking". For releasing the torque is transmitted indefinitely.
These handles combine the functionality of a ratchet wrench with the modern and ergonomic design of a three-lobed handle.

Material

Cap
- Plastic, light grey

Torque mechanism
- Steel, hardened

Handle
- Thermoplastic PA-HP, glass fibre reinforced, black, matt

Inner part
- Steel, blackened

Screw
- Steel, blackened

More information

Further products

- Torque Handles

Drawing

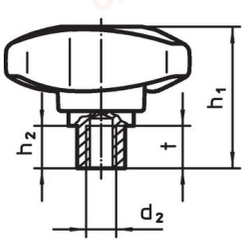

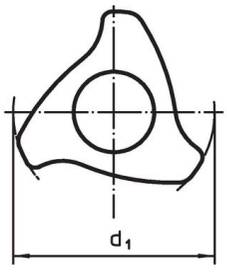

picture 1

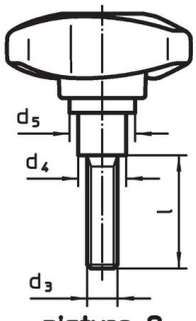

picture 2

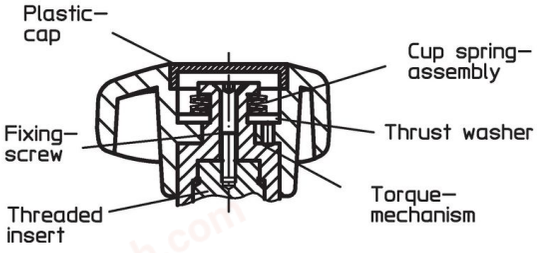

Order information

Dimensions									Tightening torque +/- 10% max.		Art. No.
d_1	d_2	d_3	l	d_4	d_5	h_1	h_2	t	[Nm]	[g]	
				[mm]							
with female thread – picture 1											
50	M 6	–	–	13.5	23.6	41.6	10.7	11	2.0	65	24711.0020
50	M 6	–	–	13.5	23.6	41.6	10.7	11	3.0	62	24711.0021
50	M 6	–	–	13.5	23.6	41.6	10.7	11	4.0	64	24711.0022
50	M 8	–	–	13.5	23.6	41.6	10.7	11	2.0	60	24711.0023
50	M 8	–	–	13.5	23.6	41.6	10.7	11	3.0	60	24711.0024
50	M 8	–	–	13.5	23.6	41.6	10.7	11	4.0	69	24711.0025
63	M 8	–	–	16.0	28.1	46.6	12.9	14	3.2	104	24711.0030

chanhvinh.com

Dimensions									Tightening torque +/- 10% max.		Art. No.
d_1	d_2	d_3	l	d_4	d_5	h_1	h_2	t	[Nm]	[g]	
				[mm]							
63	**M 8**	**–**	**–**	16.0	28.1	46.6	12.9	14	4.0	105	24711.0031
63	**M 8**	**–**	**–**	16.0	28.1	46.6	12.9	14	4.7	107	24711.0032
63	**M10**	**–**	**–**	16.0	28.1	46.6	12.9	14	3.2	103	24711.0033
63	**M10**	**–**	**–**	16.0	28.1	46.6	12.9	14	4.0	104	24711.0034
63	**M10**	**–**	**–**	16.0	28.1	46.6	12.9	14	4.7	100	24711.0035
80	**M10**	**–**	**–**	19.0	34.1	56.2	16.8	17	4.0	179	24711.0040
80	**M10**	**–**	**–**	19.0	34.1	56.2	16.8	17	5.5	179	24711.0041
80	**M10**	**–**	**–**	19.0	34.1	56.2	16.8	17	7.5	180	24711.0042
80	**M12**	**–**	**–**	19.0	34.1	56.2	16.8	17	4.0	180	24711.0043
80	**M12**	**–**	**–**	19.0	34.1	56.2	16.8	17	5.5	168	24711.0044
80	**M12**	**–**	**–**	19.0	34.1	56.2	16.8	17	7.5	171	24711.0045
with screw – picture 2											
50	**–**	**M 8**	**16**	13.5	23.6	41.6	10.7	–	2.0	60	24711.0300
50	**–**	**M 8**	**16**	13.5	23.6	41.6	10.7	–	3.0	75	24711.0301
50	**–**	**M 8**	**16**	13.5	23.6	41.6	10.7	–	4.0	76	24711.0302
50	**–**	**M 8**	**20**	13.5	23.6	41.6	10.7	–	2.0	70	24711.0303
50	**–**	**M 8**	**20**	13.5	23.6	41.6	10.7	–	3.0	73	24711.0304
50	**–**	**M 8**	**20**	13.5	23.6	41.6	10.7	–	4.0	71	24711.0305
50	**–**	**M 8**	**25**	13.5	23.6	41.6	10.7	–	2.0	74	24711.0306
50	**–**	**M 8**	**25**	13.5	23.6	41.6	10.7	–	3.0	72	24711.0307
50	**–**	**M 8**	**25**	13.5	23.6	41.6	10.7	–	4.0	73	24711.0308
50	**–**	**M 8**	**32**	13.5	23.6	41.6	10.7	–	2.0	77	24711.0309
50	**–**	**M 8**	**32**	13.5	23.6	41.6	10.7	–	3.0	74	24711.0310
50	**–**	**M 8**	**32**	13.5	23.6	41.6	10.7	–	4.0	75	24711.0311
50	**–**	**M 8**	**40**	13.5	23.6	41.6	10.7	–	2.0	76	24711.0312
50	**–**	**M 8**	**40**	13.5	23.6	41.6	10.7	–	3.0	76	24711.0313
50	**–**	**M 8**	**40**	13.5	23.6	41.6	10.7	–	4.0	77	24711.0314
50	**–**	**M10**	**20**	13.5	23.6	41.6	10.7	–	2.0	73	24711.0315
50	**–**	**M10**	**20**	13.5	23.6	41.6	10.7	–	3.0	73	24711.0316
50	**–**	**M10**	**20**	13.5	23.6	41.6	10.7	–	4.0	74	24711.0317
50	**–**	**M10**	**25**	13.5	23.6	41.6	10.7	–	2.0	76	24711.0318
50	**–**	**M10**	**25**	13.5	23.6	41.6	10.7	–	3.0	76	24711.0319
50	**–**	**M10**	**25**	13.5	23.6	41.6	10.7	–	4.0	77	24711.0320
50	**–**	**M10**	**32**	13.5	23.6	41.6	10.7	–	2.0	80	24711.0321
50	**–**	**M10**	**32**	13.5	23.6	41.6	10.7	–	3.0	80	24711.0322
50	**–**	**M10**	**32**	13.5	23.6	41.6	10.7	–	4.0	81	24711.0323
50	**–**	**M10**	**40**	13.5	23.6	41.6	10.7	–	2.0	87	24711.0324
50	**–**	**M10**	**40**	13.5	23.6	41.6	10.7	–	3.0	82	24711.0325
50	**–**	**M10**	**40**	13.5	23.6	41.6	10.7	–	4.0	83	24711.0326
50	**–**	**M10**	**50**	13.5	23.6	41.6	10.7	–	2.0	87	24711.0327
50	**–**	**M10**	**50**	13.5	23.6	41.6	10.7	–	3.0	89	24711.0328
50	**–**	**M10**	**50**	13.5	23.6	41.6	10.7	–	4.0	88	24711.0329
63	**–**	**M 8**	**25**	16.0	28.1	46.6	12.9	–	3.2	120	24711.0400
63	**–**	**M 8**	**25**	16.0	28.1	46.6	12.9	–	4.0	117	24711.0401
63	**–**	**M 8**	**25**	16.0	28.1	46.6	12.9	–	4.7	120	24711.0402
63	**–**	**M 8**	**32**	16.0	28.1	46.6	12.9	–	3.2	119	24711.0403
63	**–**	**M 8**	**32**	16.0	28.1	46.6	12.9	–	4.0	120	24711.0404
63	**–**	**M 8**	**32**	16.0	28.1	46.6	12.9	–	4.7	121	24711.0405
63	**–**	**M 8**	**40**	16.0	28.1	46.6	12.9	–	3.2	82	24711.0406
63	**–**	**M 8**	**40**	16.0	28.1	46.6	12.9	–	4.0	83	24711.0407
63	**–**	**M 8**	**40**	16.0	28.1	46.6	12.9	–	4.7	83	24711.0408
63	**–**	**M 8**	**50**	16.0	28.1	46.6	12.9	–	3.2	128	24711.0409
63	**–**	**M 8**	**50**	16.0	28.1	46.6	12.9	–	4.0	127	24711.0410
63	**–**	**M 8**	**50**	16.0	28.1	46.6	12.9	–	4.7	128	24711.0411
63	**–**	**M 8**	**63**	16.0	28.1	46.6	12.9	–	3.2	130	24711.0412
63	**–**	**M 8**	**63**	16.0	28.1	46.6	12.9	–	4.0	131	24711.0413
63	**–**	**M 8**	**63**	16.0	28.1	46.6	12.9	–	4.7	132	24711.0414
63	**–**	**M10**	**25**	16.0	28.1	46.6	12.9	–	3.2	122	24711.0415
63	**–**	**M10**	**25**	16.0	28.1	46.6	12.9	–	4.0	123	24711.0416
63	**–**	**M10**	**25**	16.0	28.1	46.6	12.9	–	4.7	124	24711.0417
63	**–**	**M10**	**32**	16.0	28.1	46.6	12.9	–	3.2	125	24711.0418

chanhvinh.com

Dimensions									Tightening torque +/- 10% max.		Art. No.
d_1	d_2	d_3	l	d_4	d_5	h_1	h_2	t	[Nm]	[g]	
				[mm]							
63	–	M10	32	16.0	28.1	46.6	12.9	–	4.0	126	24711.0419
63	–	M10	32	16.0	28.1	46.6	12.9	–	4.7	127	24711.0420
63	–	M10	40	16.0	28.1	46.6	12.9	–	3.2	129	24711.0421
63	–	M10	40	16.0	28.1	46.6	12.9	–	4.0	130	24711.0422
63	–	M10	40	16.0	28.1	46.6	12.9	–	4.7	131	24711.0423
63	–	M10	50	16.0	28.1	46.6	12.9	–	3.2	134	24711.0424
63	–	M10	50	16.0	28.1	46.6	12.9	–	4.0	135	24711.0425
63	–	M10	50	16.0	28.1	46.6	12.9	–	4.7	136	24711.0426
63	–	M10	63	16.0	28.1	46.6	12.9	–	3.2	140	24711.0427
63	–	M10	63	16.0	28.1	46.6	12.9	–	4.0	141	24711.0428
63	–	M10	63	16.0	28.1	46.6	12.9	–	4.7	142	24711.0429
80	–	M10	25	19.0	34.1	56.2	16.8	–	4.0	194	24711.0500
80	–	M10	25	19.0	34.1	56.2	16.8	–	5.5	195	24711.0501
80	–	M10	25	19.0	34.1	56.2	16.8	–	7.5	197	24711.0502
80	–	M10	32	19.0	34.1	56.2	16.8	–	4.0	198	24711.0503
80	–	M10	32	19.0	34.1	56.2	16.8	–	5.5	199	24711.0504
80	–	M10	32	19.0	34.1	56.2	16.8	–	7.5	200	24711.0505
80	–	M10	40	19.0	34.1	56.2	16.8	–	4.0	202	24711.0506
80	–	M10	40	19.0	34.1	56.2	16.8	–	5.5	203	24711.0507
80	–	M10	40	19.0	34.1	56.2	16.8	–	7.5	204	24711.0508
80	–	M10	50	19.0	34.1	56.2	16.8	–	4.0	208	24711.0509
80	–	M10	50	19.0	34.1	56.2	16.8	–	5.5	209	24711.0510
80	–	M10	50	19.0	34.1	56.2	16.8	–	7.5	210	24711.0511
80	–	M10	63	19.0	34.1	56.2	16.8	–	4.0	213	24711.0512
80	–	M10	63	19.0	34.1	56.2	16.8	–	5.5	223	24711.0513
80	–	M10	63	19.0	34.1	56.2	16.8	–	7.5	215	24711.0514
80	–	M12	25	19.0	34.1	56.2	16.8	–	4.0	206	24711.0515
80	–	M12	25	19.0	34.1	56.2	16.8	–	5.5	202	24711.0516
80	–	M12	25	19.0	34.1	56.2	16.8	–	7.5	203	24711.0517
80	–	M12	32	19.0	34.1	56.2	16.8	–	4.0	205	24711.0518
80	–	M12	32	19.0	34.1	56.2	16.8	–	5.5	206	24711.0519
80	–	M12	32	19.0	34.1	56.2	16.8	–	7.5	207	24711.0520
80	–	M12	40	19.0	34.1	56.2	16.8	–	4.0	210	24711.0521
80	–	M12	40	19.0	34.1	56.2	16.8	–	5.5	211	24711.0522
80	–	M12	40	19.0	34.1	56.2	16.8	–	7.5	220	24711.0523
80	–	M12	50	19.0	34.1	56.2	16.8	–	4.0	218	24711.0524
80	–	M12	50	19.0	34.1	56.2	16.8	–	5.5	219	24711.0525
80	–	M12	50	19.0	34.1	56.2	16.8	–	7.5	220	24711.0526
80	–	M12	63	19.0	34.1	56.2	16.8	–	4.0	227	24711.0527
80	–	M12	63	19.0	34.1	56.2	16.8	–	5.5	228	24711.0528
80	–	M12	63	19.0	34.1	56.2	16.8	–	7.5	229	24711.0529

Application example

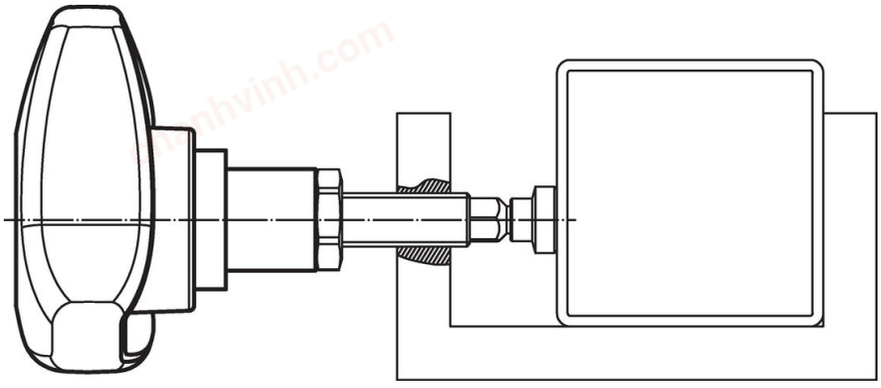

chanhvinh.com

Compliance

RoHS-compliant
Contains lead - compliant according to exceptions 6(a)-I / 6(b)-II / 6(c).

Contains SVHC substances >0,1% w/w
Contains lead - SVHC list [REACH] as of 04.02.2026.

SCIP-code
N/A

Contains Proposition 65 substances



Lead can lead to cancer, developmental disorders, and reproductive damage in men and to reproductive damage in women from exposure. https://www.P65Warnings.ca.gov/

Free from Conflict Minerals
This product does not contain any substances designated as "conflict minerals" such as tantalum, tin, gold or tungsten from the Democratic Republic of Congo or adjacent countries.

POP-compliant
Contains no persistent organic pollutants – Stockholm Convention [POP] as of September 2025.

PFAS-compliant
Contains no per- and polyfluoroalkyl substances (PFAS).

TSCA-compliant
Agent concentration in this product does not exceed the specified threshold.