chanhvinh.com

Star Grips • stainless steel, solid
EH 24690.



Product Description

Version without dirt trap. Convenient for all applications having high hygienic requirements (e.g. food industry).

Material

Handle
- Stainless steel 1.4305, dull blasted

Drawing

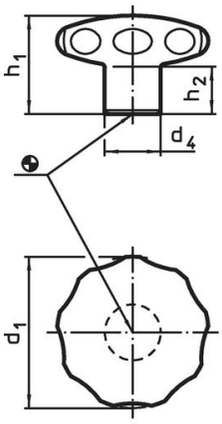

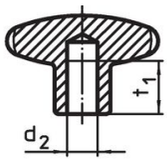

picture 1

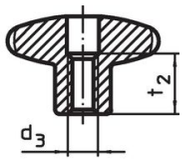

picture 2

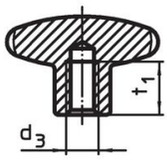

picture 3

Order information

Dimensions									Art. No.
d_1	d_2 h7	d_3	d_4	h_1	h_2	t_1 min.	t_2	[g]	
				[mm]					
with smooth blind hole – picture 1									
40	**8**	–	18	30.5	15	12	–	131	24690.0643
50	**10**	–	21	34.0	17	15	–	223	24690.0653
60	**12**	–	25	39.0	18	18	–	388	24690.0663
with thread, drilled-out – picture 2									
40	–	**M 8**	18	30.5	15	–	13	140	24690.0644
50	–	**M10**	21	34.0	17	–	16	220	24690.0654
60	–	**M12**	25	39.0	18	–	20	362	24690.0664
with threaded blind hole – picture 3									
40	–	**M 6**	18	30.5	15	12	–	134	24690.0645
40	–	**M 8**	18	30.5	15	12	–	132	24690.0646
50	–	**M 8**	21	34.0	17	15	–	226	24690.0655
50	–	**M10**	21	34.0	17	15	–	270	24690.0656
60	–	**M10**	25	39.0	18	18	–	395	24690.0665
60	–	**M12**	25	39.0	18	18	–	384	24690.0666

chanhvinh.com

Application example

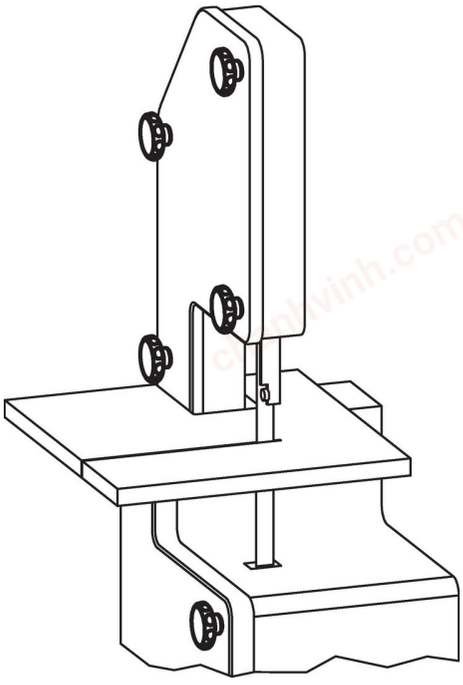

Compliance

RoHS-compliant
Compliant with Directive 2011/65/EU [RoHS].

Does not contain SVHC substances
No SVHC substances with more than 0.1% w/w contained - SVHC list [REACH] as of 04.02.2026.

SCIP-code
N/A

Does not contain Proposition 65 substances
No Proposition 65 substances included.
https://www.P65Warnings.ca.gov/

Free from Conflict Minerals
This product does not contain any substances designated as "conflict minerals" such as tantalum, tin, gold or tungsten from the Democratic Republic of Congo or adjacent countries.

POP-compliant
Contains no persistent organic pollutants – Stockholm Convention [POP] as of September 2025.

PFAS-compliant
Contains no per- and polyfluoroalkyl substances (PFAS).

TSCA-compliant
Agent concentration in this product does not exceed the specified threshold.