chanhvinh.com

Star Grip Screws • Stainless steel

EH 24690.



Product Description

Material

Handle
- Stainless steel 1.4301, dull blasted

Screw
- Stainless steel 1.4301

More information

Notes

Grip: Sheet-iron drawn. **Hub:** Butt-welded

Drawing

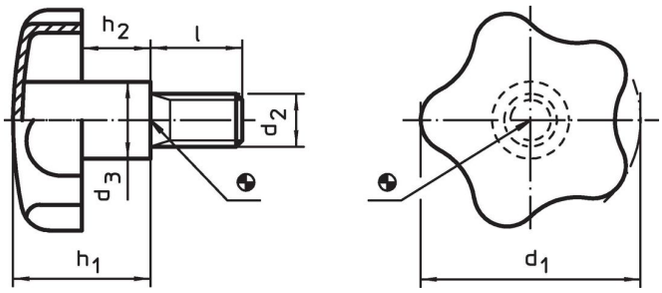

Order information

Dimensions							Art. No.
d_1	d_2	l	d_3	h_1 ~	h_2 ~		
[mm]						[g]	
40	**M 8**	**20**	14	24.0	12.0	50	24690.0140
40	**M 8**	**30**	14	24.0	12.0	55	24690.0142
40	**M 8**	**40**	14	24.0	12.0	57	24690.0144
50	**M10**	**20**	18	30.0	16.5	95	24690.0150
50	**M10**	**30**	18	30.0	16.5	97	24690.0152
50	**M10**	**40**	18	30.0	16.5	102	24690.0154
60	**M12**	**30**	20	37.5	20.0	155	24690.0160
60	**M12**	**40**	20	37.5	20.0	162	24690.0162
60	**M12**	**50**	20	37.5	20.0	171	24690.0164

chanhvinh.com

Application example

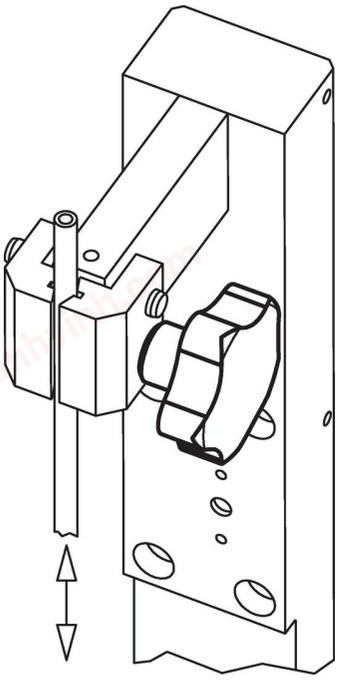

Compliance

RoHS-compliant
Compliant with Directive 2011/65/EU [RoHS].

Does not contain SVHC substances
No SVHC substances with more than 0.1% w/w contained - SVHC list [REACH] as of 04.02.2026.

SCIP-code
N/A

Does not contain Proposition 65 substances
No Proposition 65 substances included.
https://www.P65Warnings.ca.gov/

Free from Conflict Minerals
This product does not contain any substances designated as "conflict minerals" such as tantalum, tin, gold or tungsten from the Democratic Republic of Congo or adjacent countries.

POP-compliant
Contains no persistent organic pollutants – Stockholm Convention [POP] as of September 2025.

PFAS-compliant
Contains no per- and polyfluoroalkyl substances (PFAS).

TSCA-compliant
Agent concentration in this product does not exceed the specified threshold.