chanhvinh.com

Star Grips • Stainless steel

EH 24690.



Product Description

Material

Handle
- Stainless steel 1.4301, dull blasted

More information

Notes

Grip: Sheet-iron drawn. **Hub:** Butt-welded

Drawing

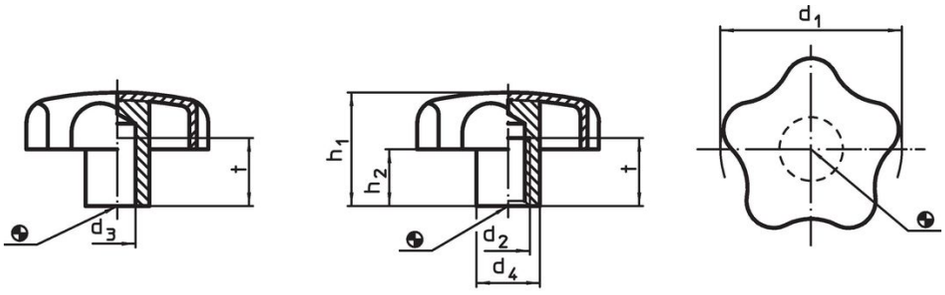

picture 1 picture 2

Order information

Dimensions								Art. No.
d_1	d_2	d_3 H7	d_4	h_1 ~	h_2 ~	t min.	[g]	
			[mm]					
with smooth blind hole – picture 1								
40	**–**	**8**	14	25	12.5	15	37	24690.0240
50	**–**	**10**	18	32	17.5	18	68	24690.0250
60	**–**	**12**	20	40	21.0	22	110	24690.0260
with threaded blind hole – picture 2								
40	**M 8**	**–**	14	25	12.5	15	37	24690.0440
50	**M10**	**–**	18	32	17.5	18	69	24690.0450
60	**M12**	**–**	20	40	21.0	22	112	24690.0460

chanhvinh.com

Application example

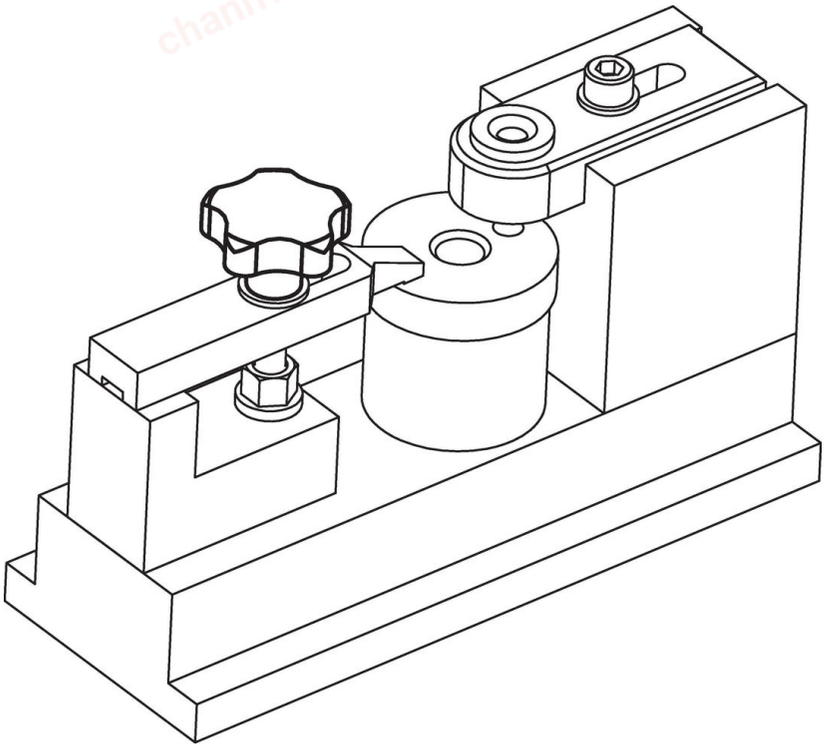

Compliance

RoHS-compliant
Compliant with Directive 2011/65/EU [RoHS].

Does not contain SVHC substances
No SVHC substances with more than 0.1% w/w contained - SVHC list [REACH] as of 04.02.2026.

SCIP-code
N/A

Does not contain Proposition 65 substances
No Proposition 65 substances included.
https://www.P65Warnings.ca.gov/

Free from Conflict Minerals
This product does not contain any substances designated as "conflict minerals" such as tantalum, tin, gold or tungsten from the Democratic Republic of Congo or adjacent countries.

POP-compliant
Contains no persistent organic pollutants – Stockholm Convention [POP] as of September 2025.

PFAS-compliant
Contains no per- and polyfluoroalkyl substances (PFAS).

TSCA-compliant
Agent concentration in this product does not exceed the specified threshold.