chanhvinh.com

Star Grips · DIN 6336 plastic
EH 24670.



Product Description

Material

Bushing
- Brass
- Steel, zinc-plated by galvanization
- Stainless steel A2

Handle
- Thermosetting plastic PF 31, black similar to RAL 9005

Drawing

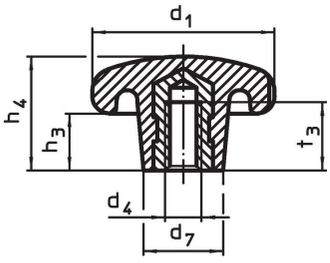

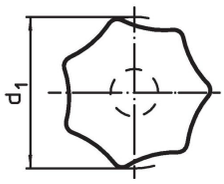

Order information

Dimensions [mm]						max. [°C]	[g]	Art. No.
d_1	d_4	d_7	h_3	h_4	t_3			
with threaded bushing, form K, Brass								
20	M 4	10	7	13	6.5	110	4.2	24670.0220
with threaded bushing, form K, Steel								
25	M 5	12	8	16	9.5	110	7.4	24670.0225
32	M 6	14	10	20	12.0	110	11.0	24670.0232
40	M 8	18	13	25	14.0	110	20.0	24670.0240
50	M10	22	17	32	18.0	110	40.0	24670.0250
63	M12	26	21	40	22.0	110	83.0	24670.0263
80	M16	35	25	50	30.0	110	161.0	24670.0280
with threaded bushing, form K, Stainless steel								
25	M 5	12	8	16	9.5	110	7.4	24670.1225
32	M 6	14	10	20	12.0	110	13.0	24670.1232
40	M 8	18	13	25	14.0	110	25.0	24670.1240
50	M10	22	17	32	18.0	110	40.0	24670.1250
63	M12	26	21	40	22.0	110	84.0	24670.1263
80	M16	35	25	50	30.0	110	157.0	24670.1280

chanhvinh.com

Application example

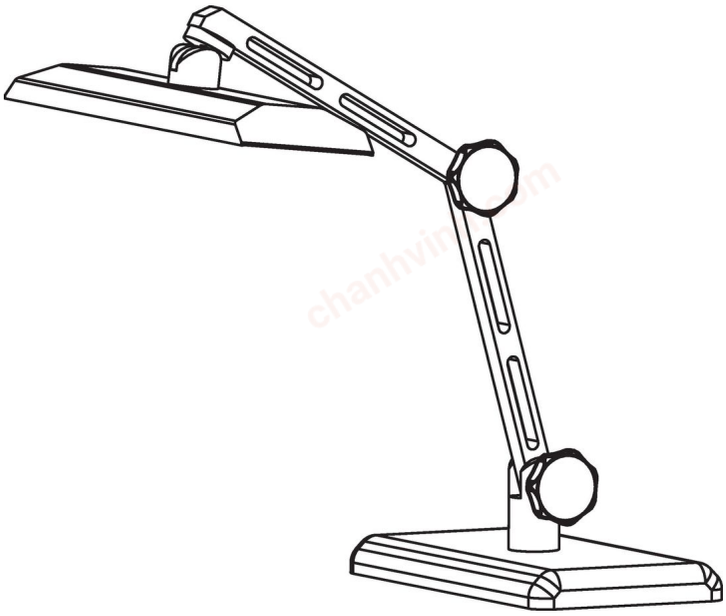

Compliance

RoHS-compliant
Compliant with Directive 2011/65/EU [RoHS].

Does not contain SVHC substances
No SVHC substances with more than 0.1% w/w contained - SVHC list [REACH] as of 04.02.2026.

SCIP-code
N/A

Does not contain Proposition 65 substances
No Proposition 65 substances included.
https://www.P65Warnings.ca.gov/

Free from Conflict Minerals
This product does not contain any substances designated as "conflict minerals" such as tantalum, tin, gold or tungsten from the Democratic Republic of Congo or adjacent countries.

POP-compliant
Contains no persistent organic pollutants – Stockholm Convention [POP] as of September 2025.

PFAS-compliant
Contains no per- and polyfluoroalkyl substances (PFAS).

TSCA-compliant
Agent concentration in this product does not exceed the specified threshold.