chanhvinh.com

Palm Grips • similar to DIN 6335, stainless steel A4

EH 24631.



Product Description

Version without dirt trap. Convenient for all applications having high hygienic requirements (e.g. food industry).
The stainless steel A4 version ensures maximum corrosion resistance.

Material

Handle
- Stainless steel A4, polished

Drawing

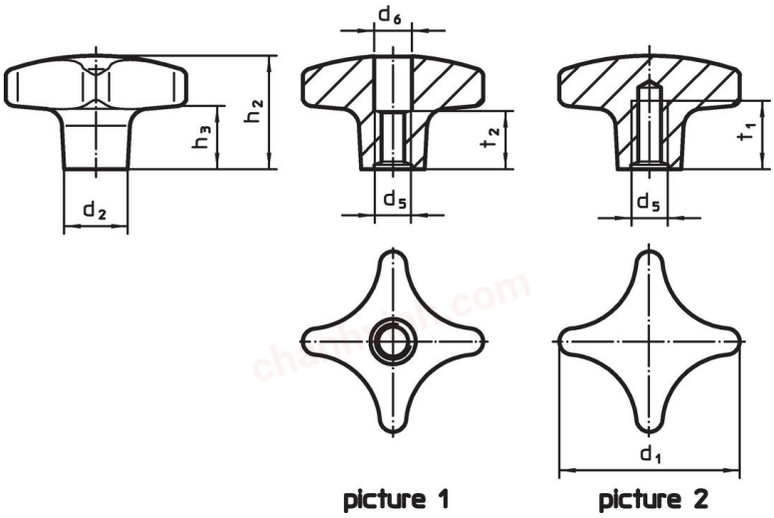

picture 1 picture 2

Order information

Dimensions									
d_1	d_2	d_5	d_6	h_2	h_3	t_1 min.	t_2	[g]	Art. No.
			[mm]						
with thread, drilled-out – picture 1									
32	12	M 6	6.4	20	9	–	10	37	24631.1332
40	14	M 8	8.4	25	13	–	13	60	24631.1340
50	18	M10	10.5	32	18	–	16	110	24631.1350
63	20	M12	13.0	40	23	–	20	200	24631.1363
with threaded blind hole – picture 2									
32	12	M 6	–	20	9	12	–	39	24631.1432
40	14	M 8	–	25	13	15	–	62	24631.1440
50	18	M10	–	32	18	18	–	117	24631.1450
63	20	M12	–	40	23	22	–	213	24631.1463

Compliance

For detailed compliance information please select the desired article number.