chanhvinh.com

Handwheels • DIN 950 grey cast iron
EH 24580.



Product Description

Hub machined; rim turned and mirror-finished on all sides, non-machined surfaces cleanly blasted.

Material

Handwheel
- Grey cast iron GG

Machine handle DIN 39 EH 24450.
- Steel, turned, zinc-plated by galvanization, passivated

Machine handle DIN 98 EH 24460. rotating
- Steel, turned, zinc-plated by galvanization, passivated

Assembly

Shaft-end washers EH 22270. for axial fastening.

More information

Further products

- Shaft-End Washers
- Rotating Machine Handles, DIN 98

Drawing

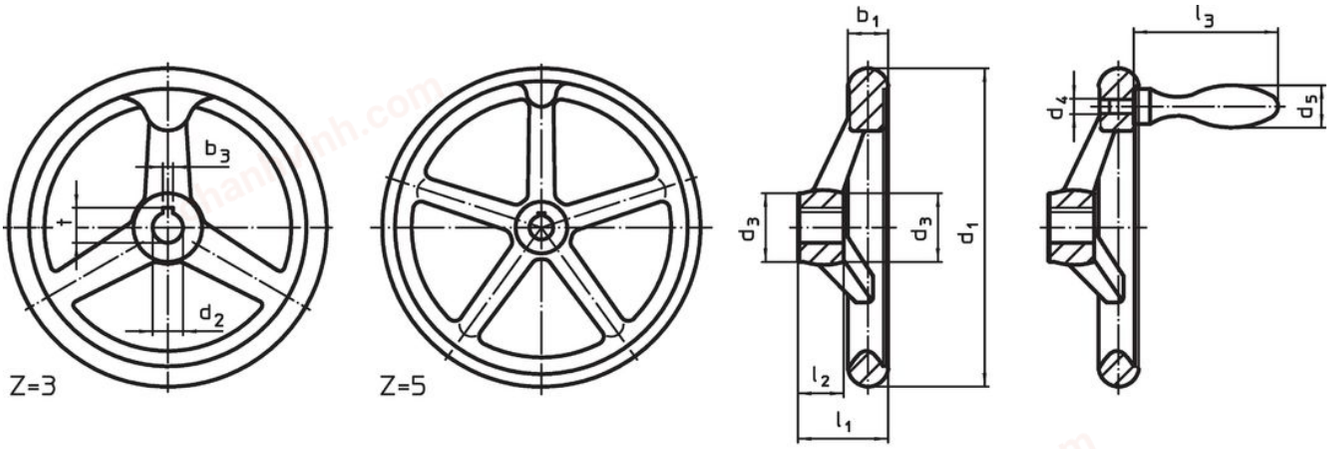

picture 1 picture 2

The orientation of the hub keyway may be different than shown in the drawing.

Order information

Dimensions								Hub keyway, DIN 6885 sheet 1		Number of spokes	Corresponding machine handle DIN 39 / DIN 98		Art. No.
d_1	d_2 H7	d_3	d_4	d_5	l_1 ~	l_2	l_3 ~	b_3	t	z			
[mm]								[mm]			[mm]		
without hub keyway, without handle, form B-F/A (formerly: A 4) – picture 1													
80	**10**	24	–	–	29	16	–	–	–	3	–	304.0 g	24580.0000
80	**12**	24	–	–	29	16	–	–	–	3	–	319.0 g	24580.0001
100	**10**	26	–	–	33	17	–	–	–	3	–	486.0 g	24580.0005
100	**12**	26	–	–	33	17	–	–	–	3	–	506.0 g	24580.0006
125	**12**	28	–	–	36	18	–	–	–	3	–	720.0 g	24580.0010
125	**14**	28	–	–	36	18	–	–	–	3	–	750.0 g	24580.0011
140	**14**	30	–	–	39	19	–	–	–	3	–	865.0 g	24580.0015
140	**16**	30	–	–	39	19	–	–	–	3	–	907.0 g	24580.0016
160	**14**	32	–	–	40	20	–	–	–	3	–	1.2 kg	24580.0020
160	**16**	32	–	–	40	20	–	–	–	3	–	1.1 kg	24580.0021
200	**18**	38	–	–	45	24	–	–	–	3	–	2.2 kg	24580.0030
200	**22**	38	–	–	45	24	–	–	–	3	–	2.2 kg	24580.0031
250	**22**	45	–	–	50	28	–	–	–	5	–	3.7 kg	24580.0040
250	**26**	45	–	–	50	28	–	–	–	5	–	3.6 kg	24580.0041

chanhvinh.com

Dimensions								Hub keyway, DIN 6885 sheet 1		Number of spokes	Corresponding machine handle		Art. No.
d_1	d_2 H7	d_3	d_4	d_5	l_1 ~	l_2	l_3 ~	b_3	t	z	DIN 39 / DIN 98		
[mm]								[mm]			[mm]		
315	**26**	53	–	–	56	33	–	–	–	5	–	6.2 kg	24580.0045
315	**30**	53	–	–	56	33	–	–	–	5	–	5.8 kg	24580.0046
400	**30**	65	–	–	63	38	–	–	–	5	–	9.7 kg	24580.0050
400	**34**	65	–	–	63	38	–	–	–	5	–	9.9 kg	24580.0051
with hub keyway, without handle, form N-F/A (formerly: A 3) – picture 1													
80	**10**	24	–	–	29	16	–	3	11.4	3	–	288.0 g	24580.0100
80	**12**	24	–	–	29	16	–	4	13.8	3	–	287.0 g	24580.0101
100	**10**	26	–	–	33	17	–	3	11.4	3	–	500.0 g	24580.0105
100	**12**	26	–	–	33	17	–	4	13.8	3	–	500.0 g	24580.0106
125	**12**	28	–	–	36	18	–	4	13.8	3	–	750.0 g	24580.0110
125	**14**	28	–	–	36	18	–	5	16.3	3	–	723.0 g	24580.0111
140	**14**	30	–	–	39	19	–	5	16.3	3	–	902.0 g	24580.0115
140	**16**	30	–	–	39	19	–	5	18.3	3	–	940.0 g	24580.0116
160	**14**	32	–	–	40	20	–	5	16.3	3	–	1.1 kg	24580.0120
160	**16**	32	–	–	40	20	–	5	18.3	3	–	1.2 kg	24580.0121
200	**18**	38	–	–	45	24	–	6	20.8	3	–	2.1 kg	24580.0130
200	**22**	38	–	–	45	24	–	6	24.8	3	–	1.9 kg	24580.0131
250	**22**	45	–	–	50	28	–	6	24.8	5	–	3.7 kg	24580.0140
250	**26**	45	–	–	50	28	–	8	29.3	5	–	3.6 kg	24580.0141
315	**26**	53	–	–	56	33	–	8	29.3	5	–	6.0 kg	24580.0145
315	**30**	53	–	–	56	33	–	8	33.3	5	–	8.1 kg	24580.0146
400	**30**	65	–	–	63	38	–	8	33.3	5	–	11.0 kg	24580.0150
400	**34**	65	–	–	63	38	–	10	37.3	5	–	11.0 kg	24580.0151
without hub keyway, with rotating handle EH 24460., assembled form B-F/G (formerly D 4) – picture 2													
80	**10**	24	M 6	16	29	16	49	–	–	3	16	410.0 g	24580.0200
80	**12**	24	M 6	16	29	16	49	–	–	3	16	410.0 g	24580.0201
100	**10**	26	M 6	16	33	17	49	–	–	3	16	550.0 g	24580.0205
100	**12**	26	M 6	16	33	17	49	–	–	3	16	550.0 g	24580.0206
125	**12**	28	M 8	20	36	18	61	–	–	3	20	850.0 g	24580.0210
125	**14**	28	M 8	20	36	18	61	–	–	3	20	850.0 g	24580.0211
140	**14**	30	M 8	20	39	19	61	–	–	3	20	1.0 kg	24580.0215
140	**16**	30	M 8	20	39	19	61	–	–	3	20	1.0 kg	24580.0216
160	**14**	32	M10	25	40	20	75	–	–	3	25	1.4 kg	24580.0220
160	**16**	32	M10	25	40	20	75	–	–	3	25	1.4 kg	24580.0221
200	**18**	38	M10	25	45	24	75	–	–	3	25	2.2 kg	24580.0230
200	**22**	38	M10	25	45	24	75	–	–	3	25	2.2 kg	24580.0231
250	**22**	45	M12	32	50	28	95	–	–	5	32	4.2 kg	24580.0240
250	**26**	45	M12	32	50	28	95	–	–	5	32	4.2 kg	24580.0241
315	**26**	53	M12	32	56	33	95	–	–	5	32	6.2 kg	24580.0245
315	**30**	53	M12	32	56	33	95	–	–	5	32	6.2 kg	24580.0246
400	**30**	65	M12	32	63	38	95	–	–	5	32	13.0 kg	24580.0250
400	**34**	65	M12	32	63	38	95	–	–	5	32	11.0 kg	24580.0251
with hub keyway, with rotating handle EH 24460. assembled, form N-F/G (formerly: D 3) – picture 2													
80	**10**	24	M 6	16	29	16	49	3	11.4	3	16	326.0 g	24580.0300
80	**12**	24	M 6	16	29	16	49	4	13.8	3	16	410.0 g	24580.0301
100	**10**	26	M 6	16	33	17	49	3	11.4	3	16	550.0 g	24580.0305
100	**12**	26	M 6	16	33	17	49	4	13.8	3	16	550.0 g	24580.0306
125	**12**	28	M 8	20	36	18	61	4	13.8	3	20	850.0 g	24580.0310
125	**14**	28	M 8	20	36	18	61	5	16.3	3	20	807.0 g	24580.0311
140	**14**	30	M 8	20	39	19	61	5	16.3	3	20	950.0 g	24580.0315
140	**16**	30	M 8	20	39	19	61	5	18.3	3	20	1.0 kg	24580.0316
160	**14**	32	M10	25	40	20	75	5	16.3	3	25	1.4 kg	24580.0320
160	**16**	32	M10	25	40	20	75	5	18.3	3	25	1.4 kg	24580.0321
200	**18**	38	M10	25	45	24	75	6	20.8	3	25	2.2 kg	24580.0330
200	**22**	38	M10	25	45	24	75	6	24.8	3	25	2.2 kg	24580.0331
250	**22**	45	M12	32	50	28	95	6	24.8	5	32	4.2 kg	24580.0340
250	**26**	45	M12	32	50	28	95	8	29.3	5	32	4.2 kg	24580.0341

chanhvinh.com

Dimensions								Hub keyway, DIN 6885 sheet 1		Number of spokes	Corresponding machine handle		Art. No.
d_1	d_2 H7	d_3	d_4	d_5	l_1 ~	l_2	l_3 ~	b_3	t	z	DIN 39 / DIN 98		
[mm]								[mm]			[mm]		
315	**26**	53	M12	32	56	33	95	8	29.3	5	32	6.3 kg	24580.0345
315	**30**	53	M12	32	56	33	95	8	33.3	5	32	6.3 kg	24580.0346
400	**30**	65	M12	32	63	38	95	8	33.3	5	32	11.0 kg	24580.0350
400	**34**	65	M12	32	63	38	95	10	37.3	5	32	13.0 kg	24580.0351
without hub keyway, with machine handle EH 24450., assembled, form B-F/G (formerly: F 4) – picture 2													
80	**10**	24	M 6	16	29	16	50	–	–	3	16	887.0 g	24580.0400
80	**12**	24	M 6	16	29	16	50	–	–	3	16	410.0 g	24580.0401
100	**10**	26	M 6	16	33	17	50	–	–	3	16	550.0 g	24580.0405
100	**12**	26	M 6	16	33	17	50	–	–	3	16	550.0 g	24580.0406
125	**12**	28	M 8	20	36	18	64	–	–	3	20	835.0 g	24580.0410
125	**14**	28	M 8	20	36	18	64	–	–	3	20	835.0 g	24580.0411
140	**14**	30	M 8	20	39	19	64	–	–	3	20	1.0 kg	24580.0415
140	**16**	30	M 8	20	39	19	64	–	–	3	20	1.0 kg	24580.0416
160	**14**	32	M10	25	40	20	80	–	–	3	25	1.4 kg	24580.0420
160	**16**	32	M10	25	40	20	80	–	–	3	25	1.4 kg	24580.0421
200	**18**	38	M10	25	45	24	80	–	–	3	25	2.2 kg	24580.0430
200	**22**	38	M10	25	45	24	80	–	–	3	25	2.2 kg	24580.0431
250	**22**	45	M12	32	50	28	100	–	–	5	32	4.2 kg	24580.0440
250	**26**	45	M12	32	50	28	100	–	–	5	32	4.2 kg	24580.0441
315	**26**	53	M12	32	56	33	100	–	–	5	32	6.2 kg	24580.0445
315	**30**	53	M12	32	56	33	100	–	–	5	32	6.2 kg	24580.0446
400	**30**	65	M12	32	63	38	100	–	–	5	32	10.0 kg	24580.0450
400	**34**	65	M12	32	63	38	100	–	–	5	32	10.0 kg	24580.0451
with hub keyway, with machine handle EH 24450. assembled, form N-F/G (formerly: F 3) – picture 2													
80	**10**	24	M 6	16	29	16	50	3	11.4	3	16	410.0 g	24580.0500
80	**12**	24	M 6	16	29	16	50	4	13.8	3	16	410.0 g	24580.0501
100	**10**	26	M 6	16	33	17	50	3	11.4	3	16	550.0 g	24580.0505
100	**12**	26	M 6	16	33	17	50	4	13.8	3	16	550.0 g	24580.0506
125	**12**	28	M 8	20	36	18	64	4	13.8	3	20	835.0 g	24580.0510
125	**14**	28	M 8	20	36	18	64	5	16.3	3	20	835.0 g	24580.0511
140	**14**	30	M 8	20	39	19	64	5	16.3	3	20	1.0 kg	24580.0515
140	**16**	30	M 8	20	39	19	64	5	18.3	3	20	2.4 kg	24580.0516
160	**14**	32	M10	25	40	20	80	5	16.3	3	25	1.4 kg	24580.0520
160	**16**	32	M10	25	40	20	80	5	18.3	3	25	1.4 kg	24580.0521
200	**18**	38	M10	25	45	24	80	6	20.8	3	25	2.2 kg	24580.0530
200	**22**	38	M10	25	45	24	80	6	24.8	3	25	2.2 kg	24580.0531
250	**22**	45	M12	32	50	28	100	6	24.8	5	32	4.2 kg	24580.0540
250	**26**	45	M12	32	50	28	100	8	29.3	5	32	4.2 kg	24580.0541
315	**26**	53	M12	32	56	33	100	8	29.3	5	32	6.2 kg	24580.0545
315	**30**	53	M12	32	56	33	100	8	33.3	5	32	6.2 kg	24580.0546
400	**30**	65	M12	32	63	38	100	8	33.3	5	32	174.0 g	24580.0550
400	**34**	65	M12	32	63	38	100	10	37.3	5	32	10.0 kg	24580.0551

chanhvinh.com

Application example

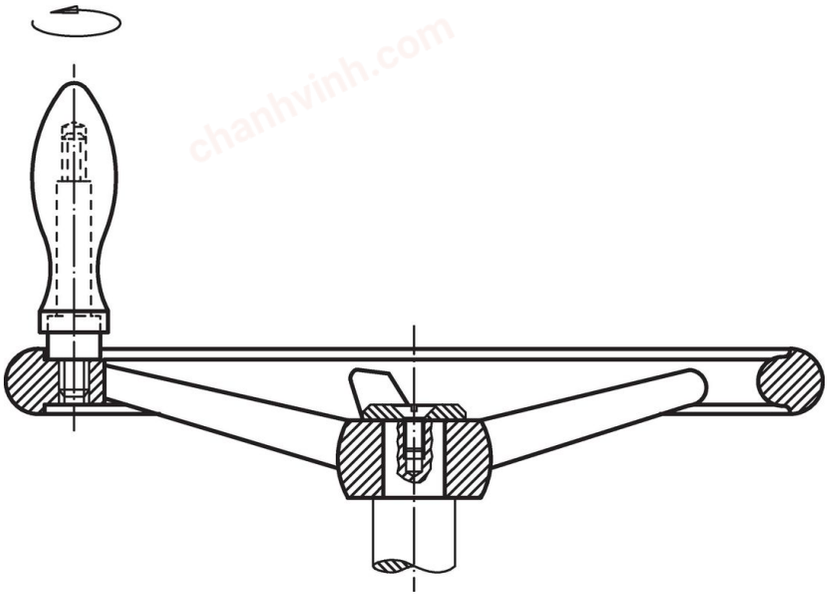

Compliance

For detailed compliance information please select the desired article number.