chanhvinh.com

Disc-Type Handwheels • DIN 3670
EH 24570.



Product Description

There are gripping indentations on the rear sides.
Hub machined; rim turned and mirror-finished on all sides, non-machined surfaces cleanly blasted.

Material

Handwheel
- Aluminium permanent-mould casting

Assembly

Shaft-end washers EH 22270. for axial fastening.

More information

Further products
- Shaft-End Washers

Drawing

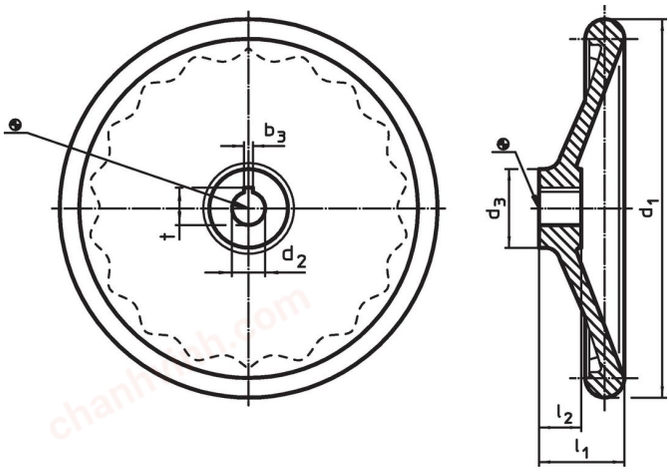

The orientation of the hub keyway may be different than shown in the drawing.

Order information

Dimensions					Hub keyway, DIN 6885 sheet 1			Art. No.
d_1	d_2 H7	d_3	l_1 ~	l_2	b_3	t		
[mm]					[mm]			
without steel bushing, form B, without hub keyway								
80	**10**	26	29	16	–	–	119.0 g	24570.0103
80	**12**	26	29	16	–	–	116.0 g	24570.0104
100	**10**	28	33	17	–	–	194.0 g	24570.0105
100	**12**	28	33	17	–	–	189.0 g	24570.0106
125	**12**	31	36	18	–	–	288.0 g	24570.0110
125	**14**	31	36	18	–	–	284.0 g	24570.0111
160	**14**	36	40	20	–	–	477.0 g	24570.0120
160	**16**	36	40	20	–	–	501.0 g	24570.0121
200	**18**	42	45	24	–	–	955.0 g	24570.0130
200	**22**	42	45	24	–	–	940.0 g	24570.0131
250	**22**	48	50	28	–	–	1.7 kg	24570.0140
250	**26**	48	50	28	–	–	1.7 kg	24570.0141
315	**26**	56	56	33	–	–	2.7 kg	24570.0150
315	**28**	56	56	33	–	–	2.7 kg	24570.0151
400	**30**	65	63	38	–	–	4.7 kg	24570.0160
400	**32**	65	63	38	–	–	4.9 kg	24570.0161
without steel bushing, form N, with hub keyway								
80	**10**	26	29	16	3	11.4	120.0 g	24570.0303
80	**12**	26	29	16	4	13.8	129.0 g	24570.0304
100	**10**	28	33	17	3	11.4	191.0 g	24570.0305
100	**12**	28	33	17	4	13.8	183.0 g	24570.0306

chanhvinh.com

Dimensions					Hub keyway, DIN 6885 sheet 1			Art. No.
d_1	d_2 H7	d_3	l_1 ~	l_2	b_3	t		
[mm]					[mm]			
125	**12**	31	36	18	4	13.8	302.0 g	24570.0310
125	**14**	31	36	18	5	16.3	290.0 g	24570.0311
160	**14**	36	40	20	5	16.3	491.0 g	24570.0320
160	**16**	36	40	20	5	18.3	481.0 g	24570.0321
200	**18**	42	45	24	6	20.8	880.0 g	24570.0330
200	**22**	42	45	24	6	24.8	928.0 g	24570.0331
250	**22**	48	50	28	6	24.8	1.7 kg	24570.0340
250	**26**	48	50	28	8	29.3	1.7 kg	24570.0341
315	**26**	56	56	33	8	29.3	2.7 kg	24570.0350
315	**28**	56	56	33	8	31.3	2.7 kg	24570.0351
400	**30**	65	63	38	8	33.3	4.9 kg	24570.0360
400	**32**	65	63	38	10	35.3	4.7 kg	24570.0361

Application example

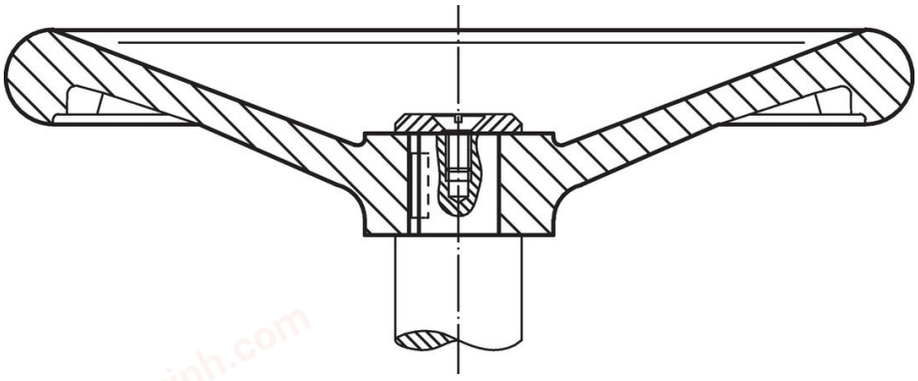

Compliance

For detailed compliance information please select the desired article number.

chanhvinh.com