chanhvinh.com

Conical Knobs

EH 24550.



Product Description

These conical knobs are made of plastic and have an internal thread.

Material

- Thermosetting plastic PF 31, black

Drawing

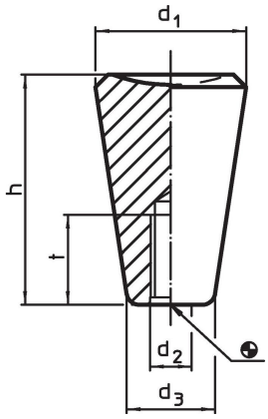

Order information

Dimensions							Art. No.
d_1	d_2	d_3 ~	h	t min.	max.		
[mm]					[°C]	[g]	
20	**M 5**	12	30	18	110	7.8	24550.0010
20	**M 6**	12	30	18	110	8.9	24550.0011
25	**M 6**	15	38	18	110	18.0	24550.0020
25	**M 8**	15	38	18	110	17.0	24550.0021
30	**M 8**	18	46	18	110	32.0	24550.0030
30	**M10**	18	46	18	110	25.0	24550.0031
35	**M10**	21	53	21	110	46.0	24550.0040
35	**M12**	21	53	21	110	43.0	24550.0041

chanhvinh.com

Application example

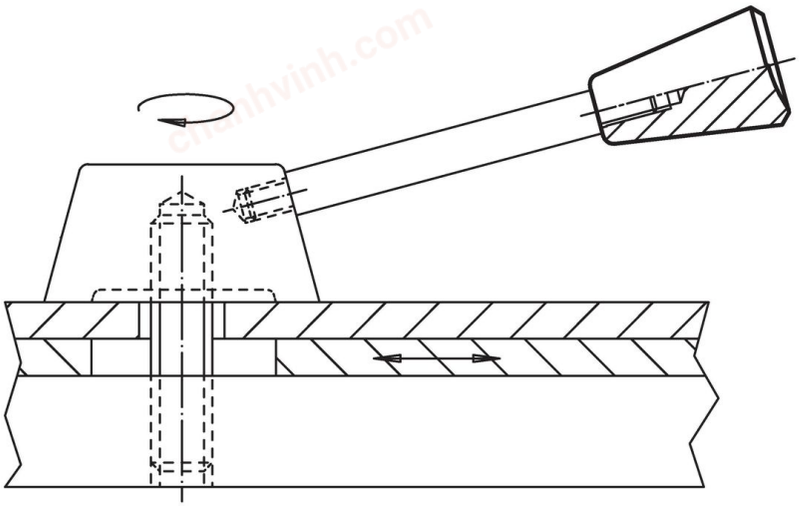

Compliance

RoHS-compliant
Compliant with Directive 2011/65/EU [RoHS].

Does not contain SVHC substances
No SVHC substances with more than 0.1% w/w contained - SVHC list [REACH] as of 04.02.2026.

SCIP-code
N/A

Does not contain Proposition 65 substances
No Proposition 65 substances included.
https://www.P65Warnings.ca.gov/

Free from Conflict Minerals
This product does not contain any substances designated as "conflict minerals" such as tantalum, tin, gold or tungsten from the Democratic Republic of Congo or adjacent countries.

POP-compliant
Contains no persistent organic pollutants – Stockholm Convention [POP] as of September 2025.

PFAS-compliant
Contains no per- and polyfluoroalkyl substances (PFAS).

TSCA-compliant
Agent concentration in this product does not exceed the specified threshold.