chanhvinh.com

Folding Handles • rotating

EH 24532.



Product Description

Material

Axle part
- Steel, blackened
- Stainless steel 1.4305

Handle
- Thermoplastic, black, dull

Operation

In the operating position the handle is locked. To move the handle to the rest position, it must be pulled out axially and flipped round.

Drawing

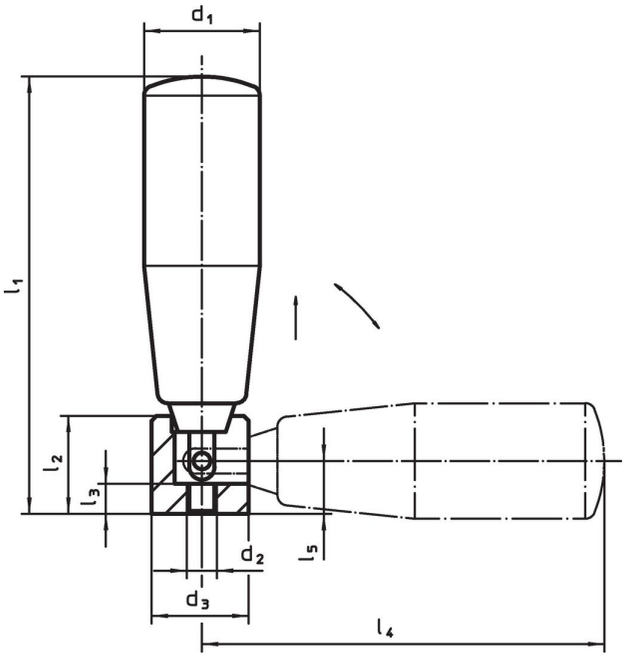

Order information

Dimensions								max.		Art. No.
d_1	d_2	d_3	l_1 ~	l_2	l_3	l_4 ~	l_5			
			[mm]					[°C]	[g]	
Steel										
18	**M5**	16	57	15.0	5	52	9.5	110	53	24532.0018
21	**M5**	16	67	15.0	5	62	9.5	110	63	24532.0021
22	**M5**	16	73	15.0	5	68	9.5	110	67	24532.0022
23	**M6**	20	87	19.5	6	80	10.5	110	111	24532.0023
26	**M6**	20	102	19.5	6	95	10.5	110	137	24532.0026
28	**M8**	26	118	26.0	10	106	16.0	110	225	24532.0028
Stainless steel										
23	**M6**	20	87	19.5	6	80	10.5	110	112	24532.0123
26	**M6**	20	102	19.5	6	95	10.5	110	138	24532.0126
28	**M8**	26	118	26.0	10	106	16.0	110	225	24532.0128

Compliance

For detailed compliance information please select the desired article number.