chanhvinh.com

T-Handles

EH 24512.



Product Description

Material

- Aluminium, plastic coated, similar to RAL 9005 black, matt structure

Drawing

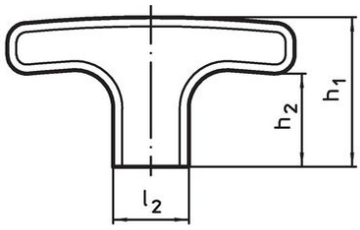

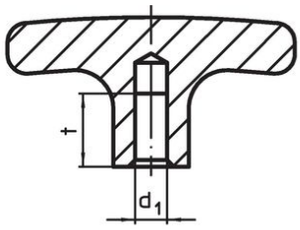

picture 1

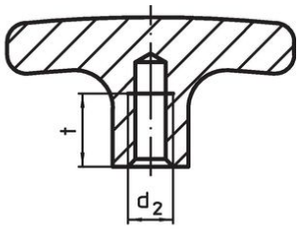

picture 2

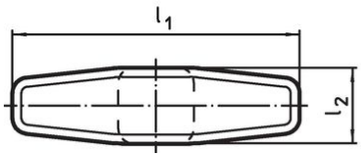

Order information

d_1 H7	d_2	l_1	l_2	h_1	h_2	t		Art. No.
			[mm]				[g]	
with smooth blind hole – picture 1								
6	–	**55**	14	33	22	12	31	24512.0020
8	–	**67**	16	37	25	16	46	24512.0030
8	–	**80**	20	41	26	16	80	24512.0035
with threaded blind hole – picture 2								
–	**M 6**	**55**	14	33	22	12	34	24512.0120
–	**M 8**	**55**	14	33	22	12	31	24512.0125
–	**M 8**	**67**	16	37	25	16	48	24512.0130
–	**M 8**	**80**	20	41	26	16	80	24512.0135
–	**M10**	**80**	20	41	26	16	80	24512.0140

Application example

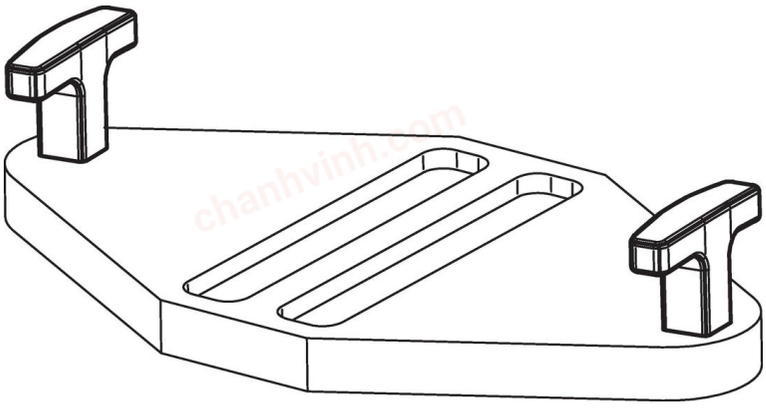

chanhvinh.com

Compliance

RoHS-compliant
Compliant with Directive 2011/65/EU [RoHS].

Does not contain SVHC substances
No SVHC substances with more than 0.1% w/w contained - SVHC list [REACH] as of 04.02.2026.

SCIP-code
N/A

Does not contain Proposition 65 substances
No Proposition 65 substances included.
https://www.P65Warnings.ca.gov/

Free from Conflict Minerals
This product does not contain any substances designated as "conflict minerals" such as tantalum, tin, gold or tungsten from the Democratic Republic of Congo or adjacent countries.

POP-compliant
Contains no persistent organic pollutants – Stockholm Convention [POP] as of September 2025.

PFAS-compliant
Contains no per- and polyfluoroalkyl substances (PFAS).

TSCA-compliant
Agent concentration in this product does not exceed the specified threshold.