chanhvinh.com

Tommy Screws • DIN 6306 with moveable pin
EH 24500.



Product Description

With this version, the pin is moveable and held by the spring.

Material

- Free cutting steel, blackened, pressure lug hardened.

More information

References

Thrust point for thrust pad DIN 6311 form S, EH 22560.

Further products

- Thrust Pads, DIN 6311 and low model

Drawing

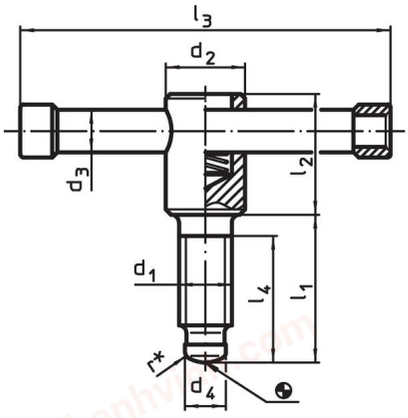

picture 1

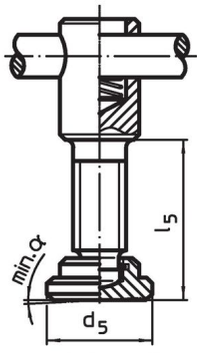

picture 2

* to ease assembly the DIN 6306 specification has been completed by r

Order information

Dimensions [mm]										α min.		Art. No.
d_1	l_1	d_2	d_3	d_4	d_5	l_2	l_3	l_4	l_5 ~		[g]	
without thrust pad, form D – picture 1												
M 8	**40**	14	6	6.0	–	25	60	32	–	–	44	24500.0008
M 8	**50**	14	6	6.0	–	25	60	42	–	–	47	24500.0009
M10	**40**	18	8	8.0	–	32	80	30	–	–	91	24500.0010
M10	**50**	18	8	8.0	–	32	80	40	–	–	96	24500.0011
M12	**50**	20	10	8.0	–	35	100	40	–	–	154	24500.0012
M12	**60**	20	10	8.0	–	35	100	50	–	–	162	24500.0013
M16	**55**	24	13	12.0	–	40	120	45	–	–	298	24500.0016
M16	**70**	24	13	12.0	–	40	120	60	–	–	319	24500.0017
M16	**90**	24	13	12.0	–	40	120	60	–	–	345	24500.0018
M20	**55**	30	16	15.5	–	45	140	45	–	–	520	24500.0020
M20	**70**	30	16	15.5	–	45	140	60	–	–	550	24500.0021
M20	**90**	30	16	15.5	–	45	140	80	–	–	593	24500.0022
with thrust pad, form E – picture 2												
M 8	**40**	14	6	6.0	16	25	60	32	43.0	3°	53	24500.0108
M 8	**50**	14	6	6.0	16	25	60	42	53.0	3°	56	24500.0109
M10	**40**	18	8	8.0	20	32	80	30	43.6	3°	110	24500.0110
M10	**50**	18	8	8.0	20	32	80	40	53.6	3°	114	24500.0111
M12	**50**	20	10	8.0	25	35	100	40	54.6	3°	193	24500.0112
M12	**60**	20	10	8.0	25	35	100	50	64.6	3°	198	24500.0113
M16	**55**	24	13	12.0	32	40	120	45	60.4	5°	357	24500.0116
M16	**70**	24	13	12.0	32	40	120	60	75.4	5°	377	24500.0117

chanhvinh.com

Dimensions										α		Art. No.
d_1	l_1	d_2	d_3	d_4	d_5	l_2	l_3	l_4	l_5 ~	min.		
[mm]											[g]	
M16	**90**	24	13	12.0	32	40	120	80	95.4	5°	402	24500.0118
M20	**55**	30	16	15.5	40	45	140	45	60.5	4°	623	24500.0120
M20	**70**	30	16	15.5	40	45	140	60	75.5	4°	653	24500.0121
M20	**90**	30	16	15.5	40	45	140	80	95.5	4°	693	24500.0122

Compliance

For detailed compliance information please select the desired article number.