chanhvinh.com

Tommy Screws • DIN 6304 with fixed pin
EH 24490.



Product Description

With this version, the pin is pressed in.

Material

- Free cutting steel, blackened, pressure lug hardened.

More information

References

Thrust point for thrust pad DIN 6311 form S, EH 22560.

Further products

- Thrust Pads, DIN 6311 and low model

Drawing

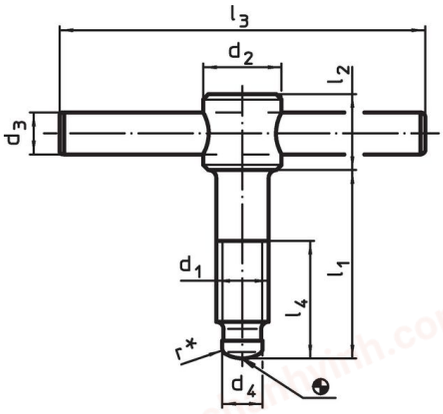

picture 1

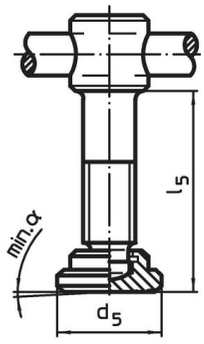

picture 2

* to ease assembly the DIN 6304 specification has been completed by r

Order information

Dimensions [mm]										α min.		Art. No.
d_1	l_1	d_2	d_3	d_4	d_5	l_2	l_3 ~	l_4	l_5 ~		[g]	
without thrust pad, form E – picture 1												
M 6	**40**	12	5	4.5	–	10	50	30	–	–	21	24490.0006
M 6	**50**	12	5	4.5	–	10	50	40	–	–	23	24490.0007
M 8	**50**	14	6	6.0	–	12	60	35	–	–	40	24490.0008
M 8	**60**	14	6	6.0	–	12	60	45	–	–	42	24490.0009
M10	**60**	18	8	8.0	–	14	80	40	–	–	81	24490.0010
M10	**70**	18	8	8.0	–	14	80	50	–	–	86	24490.0011
M12	**70**	20	10	8.0	–	18	100	50	–	–	140	24490.0012
M12	**80**	20	10	8.0	–	18	100	60	–	–	148	24490.0013
M16	**75**	24	12	12.0	–	20	120	55	–	–	249	24490.0016
M16	**90**	24	12	12.0	–	20	120	70	–	–	269	24490.0017
M16	**110**	24	12	12.0	–	20	120	90	–	–	294	24490.0018
M20	**75**	30	16	15.5	–	28	140	55	–	–	475	24490.0020
M20	**90**	30	16	15.5	–	28	140	70	–	–	504	24490.0021
M20	**110**	30	16	15.5	–	28	140	90	–	–	545	24490.0022
with thrust pad, form F – picture 2												
M 6	**40**	12	5	4.5	12	10	50	30	42.1	7°	24	24490.0106
M 6	**50**	12	5	4.5	12	10	50	40	52.1	7°	28	24490.0107
M 8	**50**	14	6	6.0	16	12	60	35	53.0	4°	49	24490.0108
M 8	**60**	14	6	6.0	16	12	60	45	63.0	4°	54	24490.0109
M10	**60**	18	8	8.0	20	14	80	40	63.6	3°	97	24490.0110
M10	**70**	18	8	8.0	20	14	80	50	73.6	3°	102	24490.0111
M12	**70**	20	10	8.0	25	18	100	50	74.6	3°	173	24490.0112
M12	**80**	20	10	8.0	25	18	100	60	84.6	3°	178	24490.0113

chanhvinh.com

Dimensions										α		Art. No.
d_1	l_1	d_2	d_3	d_4	d_5	l_2	l_3 ~	l_4	l_5 ~	min.		
[mm]											[g]	
M16	**75**	24	12	12.0	32	20	120	55	80.4	5°	317	24490.0116
M16	**90**	24	12	12.0	32	20	120	70	95.4	5°	342	24490.0117
M16	**110**	24	12	12.0	32	20	120	90	115.4	5°	367	24490.0118
M20	**75**	30	16	15.5	40	28	140	55	80.5	4°	573	24490.0120
M20	**90**	30	16	15.5	40	28	140	70	95.5	4°	603	24490.0121
M20	**110**	30	16	15.5	40	28	140	90	115.5	4°	643	24490.0122

Compliance

For detailed compliance information please select the desired article number.