chanhvinh.com

Knurled Nuts • DIN 6303

EH 24480.

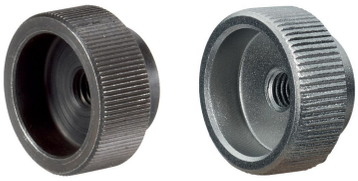

Product Description

Material

- Free cutting steel, blackened
- Stainless steel 1.4305

Assembly

Form B: after being bored through the pin hole is to be situated within the tolerance field H7.

More information

Notes

Knurling pitch and knurling depth may differ from DIN.

Drawing

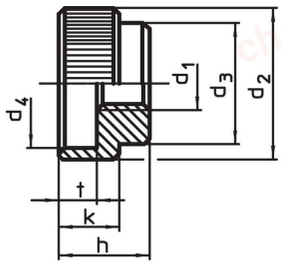

picture 1

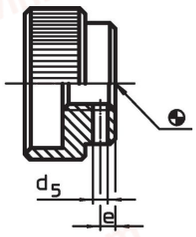

picture 2

Order information

d1	d2	d3	d4	Dimensions d5 Predrilled [mm]	e	h	k	t	Suitable straight pin DIN 7	[g]	Art. No.
without pin hole, form A – picture 1, Free cutting steel											
M 5	20	14	15	–	–	12	8	5	–	16	24480.0005
M 6	24	16	18	–	–	14	10	6	–	27	24480.0006
M 8	30	20	24	–	–	17	12	7	–	46	24480.0008
M10	36	28	30	–	–	20	14	8	–	83	24480.0010
M12	40	32	34	–	–	24	16	10	–	118	24480.0012
with pin hole, form B – picture 2, Free cutting steel											
M 5	20	14	15	1.4	2.5	12	8	5	1,5 m6 x 14	15	24480.0105
M 6	24	16	18	1.4	2.5	14	10	6	1,5 m6 x 16	25	24480.0106
M 8	30	20	24	1.9	3.0	17	12	7	2,0 m6 x 20	45	24480.0108
M10	36	28	30	2.9	4.0	20	14	8	3,0 m6 x 28	86	24480.0110
M12	40	32	34	3.9	4.0	24	16	10	4,0 m6 x 32	121	24480.0112
without pin hole, form A – picture 1, Stainless steel											
M 5	20	14	15	–	–	12	8	5	–	15	24480.0205
M 6	24	16	18	–	–	14	10	6	–	27	24480.0206
M 8	30	20	24	–	–	17	12	7	–	49	24480.0208
M10	36	28	30	–	–	20	14	8	–	86	24480.0210
M12	40	32	34	–	–	24	16	10	–	120	24480.0212
with pin hole, form B – picture 2, Stainless steel											
M 5	20	14	15	1.4	2.5	12	8	5	1,5 m6 x 14	16	24480.0305
M 6	24	16	18	1.4	2.5	14	10	6	1,5 m6 x 16	27	24480.0306
M 8	30	20	24	1.9	3.0	17	12	7	2,0 m6 x 20	50	24480.0308
M10	36	28	30	2.9	4.0	20	14	8	3,0 m6 x 28	82	24480.0310
M12	40	32	34	3.9	4.0	24	16	10	4,0 m6 x 32	115	24480.0312

chanhvinh.com

Application example

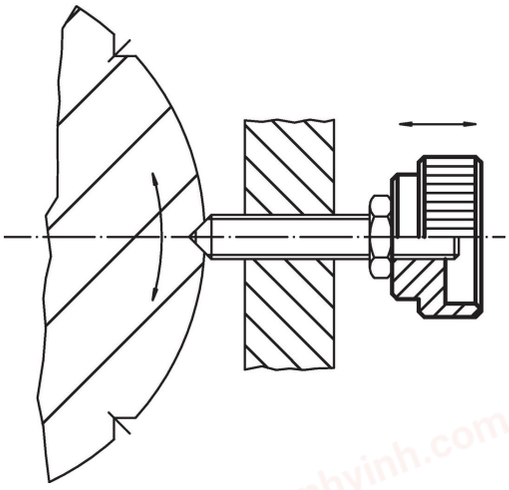

Compliance

For detailed compliance information please select the desired article number.