chanhvinh.com

Clamping Nuts • welded, double-sided
EH 24470.



Product Description

Allows for two-handed operating.

Material

- Steel, zinc-plated by galvanization
- Stainless steel 1.4301, dull blasted

Drawing

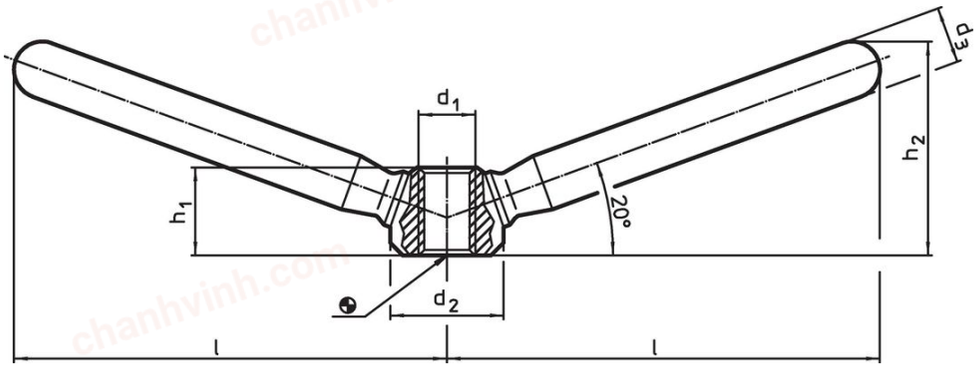

Order information

l ~	Dimensions d_1	d_2	d_3	h_1	h_2		Art. No.
		[mm]				[g]	
Steel							
47.5	M 8	16	10	12.5	26	63	24470.0706
59.5	M10	20	12	15.0	32	116	24470.0708
75.5	M12	25	14	19.0	40	210	24470.0710
94.5	M16	32	18	25.0	52	432	24470.0712
118.0	M20	40	20	31.0	62	716	24470.0716
Stainless steel							
47.5	M 8	16	10	12.5	26	61	24470.0806
59.5	M10	20	12	15.0	32	116	24470.0808
75.5	M12	25	14	19.0	40	211	24470.0810
94.5	M16	32	18	25.0	52	437	24470.0812
118.0	M20	40	20	31.0	62	721	24470.0816

chanhvinh.com

Application example

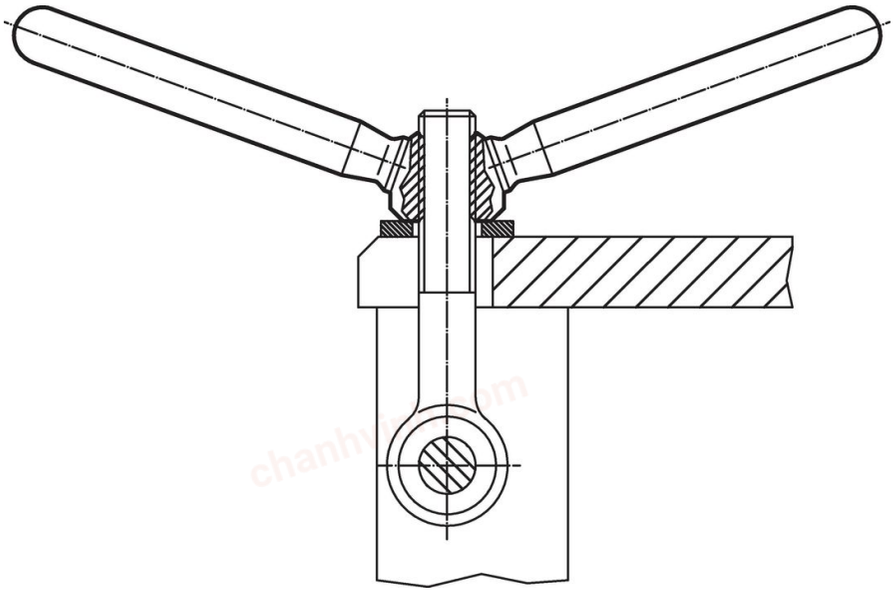

Compliance

For detailed compliance information please select the desired article number.