chanhvinh.com

Clamping Nuts • welded
EH 24470.



Product Description

Low-price version to DIN 99.

Material

- Steel, zinc-plated by galvanization
- Stainless steel 1.4301, dull blasted

Drawing

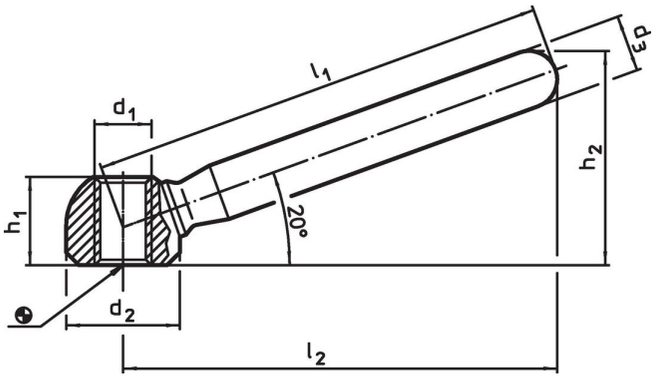

Order information

l_1	l_2 ~	d_1	d_2	d_3	h_1	h_2 ~		Art. No.
	Dimensions [mm]						[g]	
Steel								
63	60	M 8	16	10	12.5	30.5	45	24470.0506
80	76	M10	20	12	15.0	37.0	83	24470.0508
100	95	M12	25	14	19.0	46.0	149	24470.0510
125	119	M16	32	18	25.0	58.5	313	24470.0512
160	152	M20	40	20	31.0	73.0	533	24470.0516
Stainless steel								
63	60	M 8	16	10	12.5	30.5	39	24470.0606
80	76	M10	20	12	15.0	37.0	73	24470.0608
100	95	M12	25	14	19.0	46.0	167	24470.0610
125	119	M16	32	18	25.0	58.5	314	24470.0612
160	152	M20	40	20	31.0	73.0	533	24470.0616

chanhvinh.com

Application example

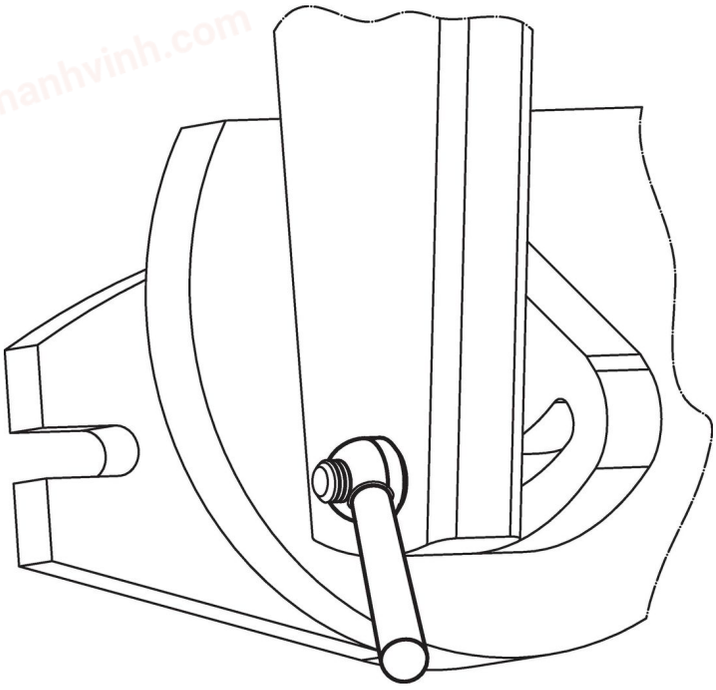

Compliance

For detailed compliance information please select the desired article number.