chanhvinh.com

Tapered Levers • DIN 99
EH 24470.



Product Description

Material

- Steel, blackened
- Stainless steel 1.4305, dull blasted

Drawing

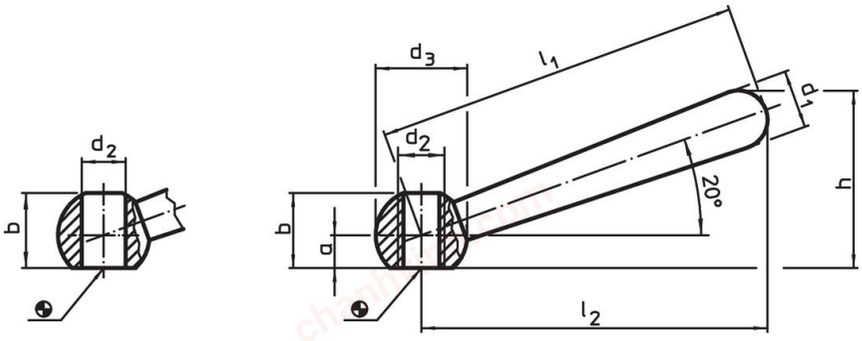

picture 1 picture 2

Order information

Dimensions									Art. No.
l_1	l_2 ~	a	b ~	d_1	d_2	d_3	h ~		
[mm]									
slanted, with smooth bore, form L – picture 1, Steel									
50	48	4.0	9.5	8	6H7	12	24.0	16.0 g	24470.0105
63	60	5.0	12.0	10	8H7	16	30.5	37.0 g	24470.0106
80	76	6.0	14.5	13	10H7	20	38.0	73.0 g	24470.0108
100	95	7.5	18.5	16	12H7	25	47.0	140.0 g	24470.0110
125	119	10.0	24.0	20	16H7	32	59.5	282.0 g	24470.0112
160	152	12.5	30.0	25	20H7	40	75.7	553.0 g	24470.0116
200	190	18.0	40.0	32	24H7	50	97.0	1.1 kg	24470.0120
slanted, with thread, form N – picture 2, Steel									
50	48	4.0	9.5	8	M 6	12	24.0	17.0 g	24470.0305
63	60	5.0	12.5	10	M 8	16	30.5	38.0 g	24470.0306
80	76	6.0	15.0	13	M10	20	38.0	74.0 g	24470.0308
100	95	7.5	19.0	16	M12	25	47.0	142.0 g	24470.0310
125	119	10.0	25.0	20	M16	32	59.5	297.0 g	24470.0312
160	152	12.5	31.0	25	M20	40	75.7	574.0 g	24470.0316
200	190	18.0	41.0	32	M24	50	97.0	1.1 kg	24470.0320
slanted, with smooth bore, form L – picture 1, Stainless steel									
63	60	5.0	12.0	10	8H7	16	30.5	37.0 g	24470.0206
80	76	6.0	14.5	13	10H7	20	38.0	73.0 g	24470.0208
100	95	7.5	18.5	16	12H7	25	47.0	143.0 g	24470.0210
slanted, with thread, form N – picture 2, Stainless steel									
50	48	4.0	9.5	8	M 6	12	24.0	17.0 g	24470.0405
63	60	5.0	12.5	10	M 8	16	30.5	38.0 g	24470.0406
80	76	6.0	15.0	13	M10	20	38.0	74.0 g	24470.0408
100	95	7.5	19.0	16	M12	25	47.0	145.0 g	24470.0410
125	119	10.0	25.0	20	M16	32	59.5	289.0 g	24470.0412

chanhvinh.com

Application example

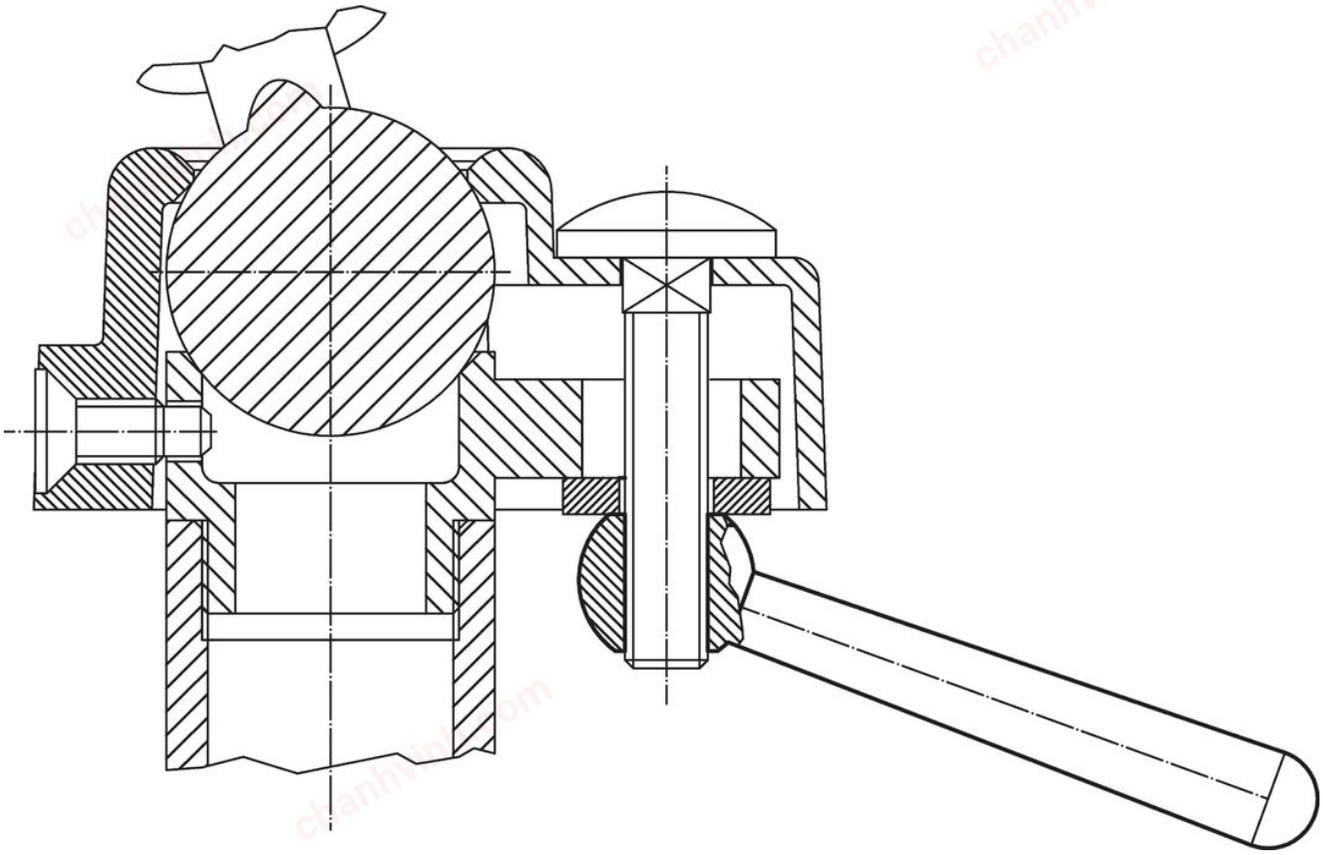

Compliance

For detailed compliance information please select the desired article number.