chanhvinh.com

Rotating Machine Handles • DIN 98

EH 24460.



Product Description

Material

- Steel, turned, zinc-plated by galvanization, passivated

Drawing

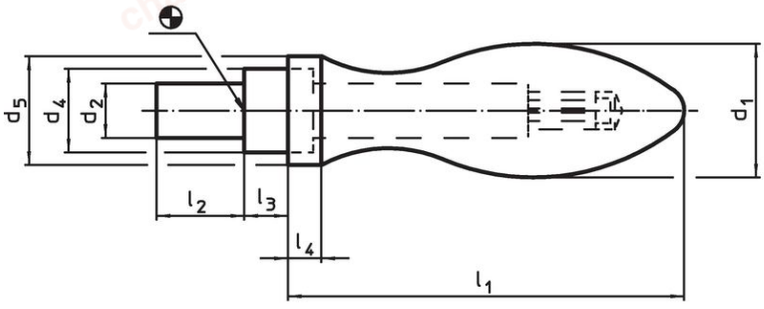

picture 1

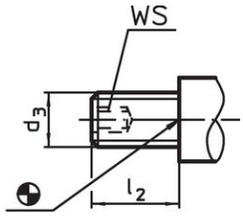

picture 2

Order information

Dimensions									WS		Art. No.
d_1	d_2 h8	d_3	d_4 h13	d_5	l_1 ~	l_2	l_3	l_4			
[mm]									[mm]	[g]	
with smooth lug, form D – picture 1											
16	7	–	10	14	49	11	5.5	5.0	–	55	24460.0016
20	8	–	13	18	61	13	6.0	6.0	–	105	24460.0020
25	10	–	16	21	75	14	8.0	6.5	–	200	24460.0025
32	13	–	20	26	95	21	10.5	8.0	–	395	24460.0032
36	16	–	22	29	106	26	11.0	9.0	–	569	24460.0036
with male thread lug, form E – picture 2											
16	–	M 6	10	14	49	11	5.5	5.0	3	51	24460.0116
20	–	M 8	13	18	61	13	6.0	6.0	4	105	24460.0120
25	–	M10	16	21	75	14	8.0	6.5	5	207	24460.0125
32	–	M12	20	26	95	21	10.5	8.0	6	387	24460.0132
36	–	M16	22	29	106	26	11.0	9.0	8	566	24460.0136

Application example

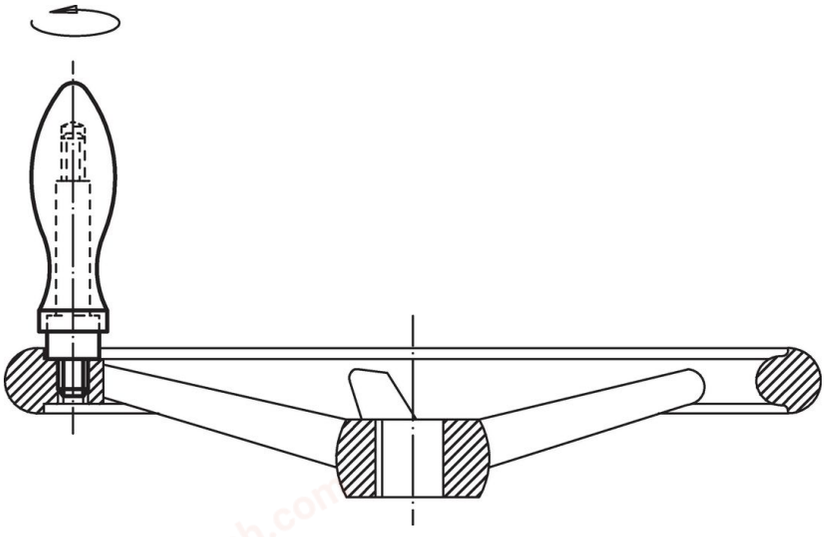

chanhvinh.com

Compliance

For detailed compliance information please select the desired article number.

chanhvinh.com