chanhvinh.com

Machine Handles • DIN 39

EH 24450.



Product Description

Material

- Steel, turned, zinc-plated by galvanization, passivated
- Stainless steel 1.4404

Drawing

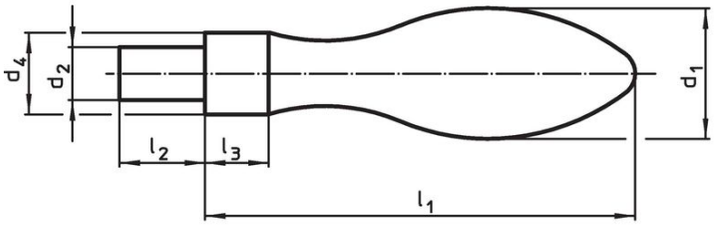

picture 1

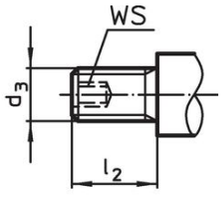

picture 2

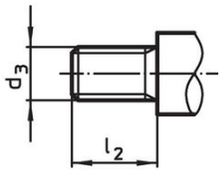

picture 3

Order information

Dimensions							WS		Art. No.
d_1	d_2 h8	d_3	d_4 h13	l_1 ~	l_2	l_3	[mm]	[g]	
with smooth lug, form D – picture 1, Steel									
16	7	–	10	50	11	7	–	45	24450.0016
20	8	–	13	64	13	8	–	92	24450.0020
25	10	–	16	80	14	10	–	179	24450.0025
32	13	–	20	100	21	13	–	356	24450.0032
36	16	–	22	112	26	14	–	649	24450.0036
with male thread lug, form E – picture 2, Steel									
16	–	M 6	10	50	11	7	3	52	24450.0116
20	–	M 8	13	64	13	8	4	97	24450.0120
25	–	M10	16	80	14	10	5	175	24450.0125
32	–	M12	20	100	21	13	6	340	24450.0132
36	–	M16	22	112	26	14	8	509	24450.0136
with male thread lug, form E – picture 3, Stainless steel									
16	–	M 6	10	50	11	7	–	45	24450.0316
20	–	M 8	13	64	13	8	–	92	24450.0320
25	–	M10	16	80	14	10	–	186	24450.0325

chanhvinh.com

Application example

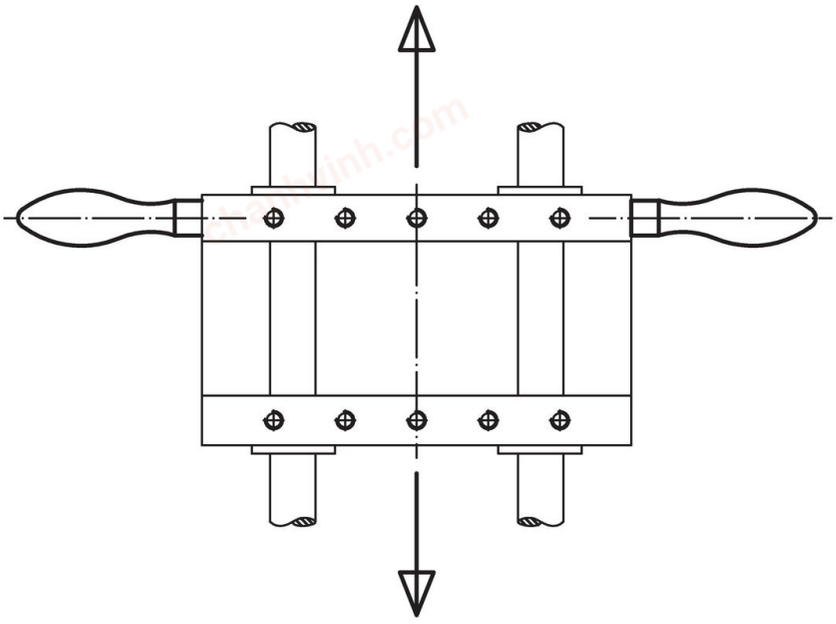

Compliance

For detailed compliance information please select the desired article number.