chanhvinh.com



# Adjustable Flat Tension Levers • with screw, stainless steel

EH 24441.



## Product Description

Adjustable flat tension levers are used when the swivel range is limited or a specific lever position is required.
Adjustable flat tension levers are characterised by their low construction height and are particularly suitable for use in restricted spaces or when the lever should not overhang..

### Material

**Lever**
- Zinc die-cast, plastic coated, black, similar to RAL 9005, matt structure
- Zinc die-cast, plastic coated, silver, similar to RAL 9006, matt structure

**Inner parts**
- Stainless steel 1.4305

**Screw**
- Stainless steel 1.4305

**Covering**
- Plastic, black
- Plastic, light grey

### Operation

**By lifting the lever** the serrations are disengaged. The lever can be positioned by the serrations. On releasing the lever, the serrations are automatically re-engaged.

## Drawing

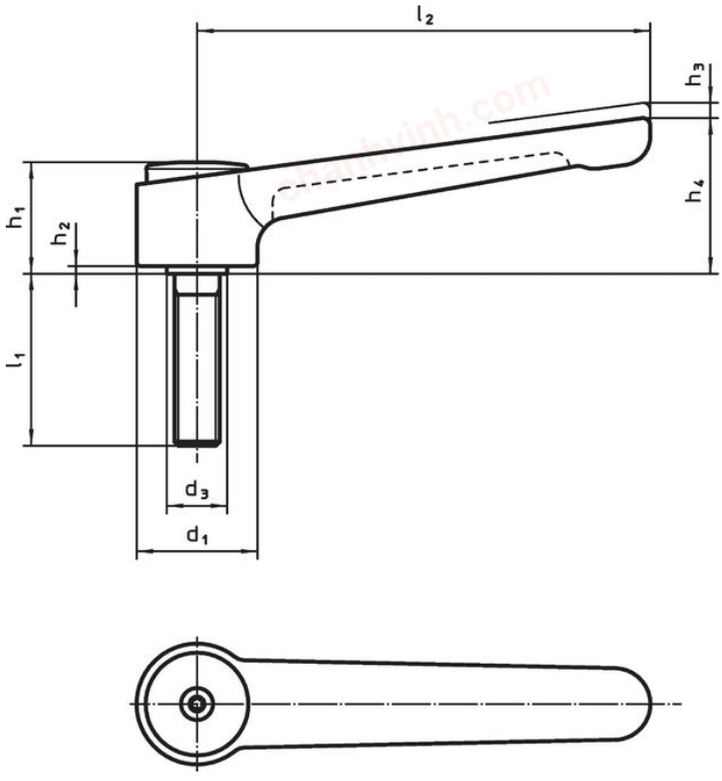


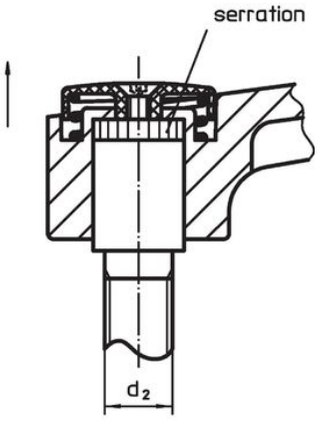




## Order information

| Dimensions | | | | | | | | | | | | Art. No. |
|---|---|---|---|---|---|---|---|---|---|---|---|---|
| $d_1$ | $d_2$ | $l_1$ | $d_3$ | $h_1$ | $h_2$ | $h_3$ | $h_4$ | $l_2$ | min. [°C] | max. [°C] | [g] | |
| | | | | [mm] | | | | | | | | |
| **black** | | | | | | | | | | | | |
| **32** | **M10** | **20** | 16 | 29.5 | 2 | 2.5 | 41.5 | 120 | -30 | 80 | 205 | 24441.0650 |
| **32** | **M10** | **25** | 16 | 29.5 | 2 | 2.5 | 41.5 | 120 | -30 | 80 | 206 | 24441.0655 |
| **32** | **M10** | **32** | 16 | 29.5 | 2 | 2.5 | 41.5 | 120 | -30 | 80 | 209 | 24441.0660 |
| **32** | **M10** | **40** | 16 | 29.5 | 2 | 2.5 | 41.5 | 120 | -30 | 80 | 211 | 24441.0665 |
| **32** | **M10** | **50** | 16 | 29.5 | 2 | 2.5 | 41.5 | 120 | -30 | 80 | 217 | 24441.0670 |

chanhvinh.com



| Dimensions | | | | | | | | | | | | Art. No. |
|---|---|---|---|---|---|---|---|---|---|---|---|---|
| $d_1$ | $d_2$ | $l_1$ | $d_3$ | $h_1$ | $h_2$ | $h_3$ | $h_4$ | $l_2$ | min. | max. | | |
| [mm] | | | | | | | | | [°C] | | [g] | |
| **32** | **M10** | **63** | 16 | 29.5 | 2 | 2.5 | 41.5 | 120 | -30 | 80 | 223 | 24441.0675 |
| **32** | **M10** | **80** | 16 | 29.5 | 2 | 2.5 | 41.5 | 120 | -30 | 80 | 232 | 24441.0680 |
| **32** | **M12** | **20** | 16 | 29.5 | 2 | 2.5 | 41.5 | 120 | -30 | 80 | 207 | 24441.0685 |
| **32** | **M12** | **25** | 16 | 29.5 | 2 | 2.5 | 41.5 | 120 | -30 | 80 | 214 | 24441.0690 |
| **32** | **M12** | **32** | 16 | 29.5 | 2 | 2.5 | 41.5 | 120 | -30 | 80 | 218 | 24441.0695 |
| **32** | **M12** | **40** | 16 | 29.5 | 2 | 2.5 | 41.5 | 120 | -30 | 80 | 223 | 24441.0700 |
| **32** | **M12** | **50** | 16 | 29.5 | 2 | 2.5 | 41.5 | 120 | -30 | 80 | 230 | 24441.0705 |
| **32** | **M12** | **63** | 16 | 29.5 | 2 | 2.5 | 41.5 | 120 | -30 | 80 | 237 | 24441.0710 |
| **32** | **M12** | **80** | 16 | 29.5 | 2 | 2.5 | 41.5 | 120 | -30 | 80 | 250 | 24441.0715 |
| **40** | **M12** | **32** | 23 | 42.0 | 4 | 4.0 | 56.0 | 145 | -30 | 80 | 442 | 24441.0725 |
| **40** | **M12** | **40** | 23 | 42.0 | 4 | 4.0 | 56.0 | 145 | -30 | 80 | 453 | 24441.0730 |
| **40** | **M12** | **50** | 23 | 42.0 | 4 | 4.0 | 56.0 | 145 | -30 | 80 | 456 | 24441.0735 |
| **40** | **M12** | **63** | 23 | 42.0 | 4 | 4.0 | 56.0 | 145 | -30 | 80 | 463 | 24441.0740 |
| **40** | **M12** | **80** | 23 | 42.0 | 4 | 4.0 | 56.0 | 145 | -30 | 80 | 460 | 24441.0745 |
| **40** | **M16** | **32** | 23 | 42.0 | 4 | 4.0 | 56.0 | 145 | -30 | 80 | 460 | 24441.0750 |
| **40** | **M16** | **40** | 23 | 42.0 | 4 | 4.0 | 56.0 | 145 | -30 | 80 | 472 | 24441.0755 |
| **40** | **M16** | **50** | 23 | 42.0 | 4 | 4.0 | 56.0 | 145 | -30 | 80 | 482 | 24441.0760 |
| **40** | **M16** | **63** | 23 | 42.0 | 4 | 4.0 | 56.0 | 145 | -30 | 80 | 499 | 24441.0765 |
| **40** | **M16** | **80** | 23 | 42.0 | 4 | 4.0 | 56.0 | 145 | -30 | 80 | 522 | 24441.0770 |
| **silver** | | | | | | | | | | | | |
| **32** | **M10** | **20** | 16 | 29.5 | 2 | 2.5 | 41.5 | 120 | -30 | 80 | 205 | 24441.1650 |
| **32** | **M10** | **25** | 16 | 29.5 | 2 | 2.5 | 41.5 | 120 | -30 | 80 | 208 | 24441.1655 |
| **32** | **M10** | **32** | 16 | 29.5 | 2 | 2.5 | 41.5 | 120 | -30 | 80 | 211 | 24441.1660 |
| **32** | **M10** | **40** | 16 | 29.5 | 2 | 2.5 | 41.5 | 120 | -30 | 80 | 211 | 24441.1665 |
| **32** | **M10** | **50** | 16 | 29.5 | 2 | 2.5 | 41.5 | 120 | -30 | 80 | 216 | 24441.1670 |
| **32** | **M10** | **63** | 16 | 29.5 | 2 | 2.5 | 41.5 | 120 | -30 | 80 | 223 | 24441.1675 |
| **32** | **M10** | **80** | 16 | 29.5 | 2 | 2.5 | 41.5 | 120 | -30 | 80 | 231 | 24441.1680 |
| **32** | **M12** | **20** | 16 | 29.5 | 2 | 2.5 | 41.5 | 120 | -30 | 80 | 205 | 24441.1685 |
| **32** | **M12** | **25** | 16 | 29.5 | 2 | 2.5 | 41.5 | 120 | -30 | 80 | 210 | 24441.1690 |
| **32** | **M12** | **32** | 16 | 29.5 | 2 | 2.5 | 41.5 | 120 | -30 | 80 | 214 | 24441.1695 |
| **32** | **M12** | **40** | 16 | 29.5 | 2 | 2.5 | 41.5 | 120 | -30 | 80 | 224 | 24441.1700 |
| **32** | **M12** | **50** | 16 | 29.5 | 2 | 2.5 | 41.5 | 120 | -30 | 80 | 229 | 24441.1705 |
| **32** | **M12** | **63** | 16 | 29.5 | 2 | 2.5 | 41.5 | 120 | -30 | 80 | 239 | 24441.1710 |
| **32** | **M12** | **80** | 16 | 29.5 | 2 | 2.5 | 41.5 | 120 | -30 | 80 | 257 | 24441.1715 |
| **40** | **M12** | **32** | 23 | 42.0 | 4 | 4.0 | 56.0 | 145 | -30 | 80 | 444 | 24441.1725 |
| **40** | **M12** | **40** | 23 | 42.0 | 4 | 4.0 | 56.0 | 145 | -30 | 80 | 447 | 24441.1730 |
| **40** | **M12** | **50** | 23 | 42.0 | 4 | 4.0 | 56.0 | 145 | -30 | 80 | 454 | 24441.1735 |
| **40** | **M12** | **63** | 23 | 42.0 | 4 | 4.0 | 56.0 | 145 | -30 | 80 | 461 | 24441.1740 |
| **40** | **M12** | **80** | 23 | 42.0 | 4 | 4.0 | 56.0 | 145 | -30 | 80 | 476 | 24441.1745 |
| **40** | **M16** | **32** | 23 | 42.0 | 4 | 4.0 | 56.0 | 145 | -30 | 80 | 460 | 24441.1750 |
| **40** | **M16** | **40** | 23 | 42.0 | 4 | 4.0 | 56.0 | 145 | -30 | 80 | 467 | 24441.1755 |
| **40** | **M16** | **50** | 23 | 42.0 | 4 | 4.0 | 56.0 | 145 | -30 | 80 | 482 | 24441.1760 |
| **40** | **M16** | **63** | 23 | 42.0 | 4 | 4.0 | 56.0 | 145 | -30 | 80 | 501 | 24441.1765 |
| **40** | **M16** | **80** | 23 | 42.0 | 4 | 4.0 | 56.0 | 145 | -30 | 80 | 520 | 24441.1770 |

chanhvinh.com



## Compliance

### RoHS-compliant
Compliant with Directive 2011/65/EU [RoHS].

### Does not contain SVHC substances
No SVHC substances with more than 0.1% w/w contained - SVHC list [REACH] as of 04.02.2026.

### SCIP-code
N/A

### Does not contain Proposition 65 substances
No Proposition 65 substances included.
https://www.P65Warnings.ca.gov/

### Free from Conflict Minerals
This product does not contain any substances designated as "conflict minerals" such as tantalum, tin, gold or tungsten from the Democratic Republic of Congo or adjacent countries.

### POP-compliant
Contains no persistent organic pollutants – Stockholm Convention [POP] as of September 2025.

### PFAS-compliant
Contains no per- and polyfluoroalkyl substances (PFAS).

### TSCA-compliant
Agent concentration in this product does not exceed the specified threshold.