chanhvinh.com

Adjustable Flat Tension Levers • with screw

EH 24441.



Product Description

Adjustable flat tension levers are used when the swivel range is limited or a specific lever position is required.
Adjustable flat tension levers are characterised by their low construction height and are particularly suitable for use in restricted spaces or when the lever should not overhang..

Material

Lever
- Zinc die-cast, plastic coated, black, similar to RAL 9005, matt structure
- Zinc die-cast, plastic coated, silver, similar to RAL 9006, matt structure

Inner parts
- Steel, blackened

Screw
- Steel, blackened

Covering
- Plastic, black
- Plastic, light grey

Operation

By lifting the lever the serrations are disengaged. The lever can be positioned by the serrations. On releasing the lever, the serrations are automatically re-engaged.

Drawing

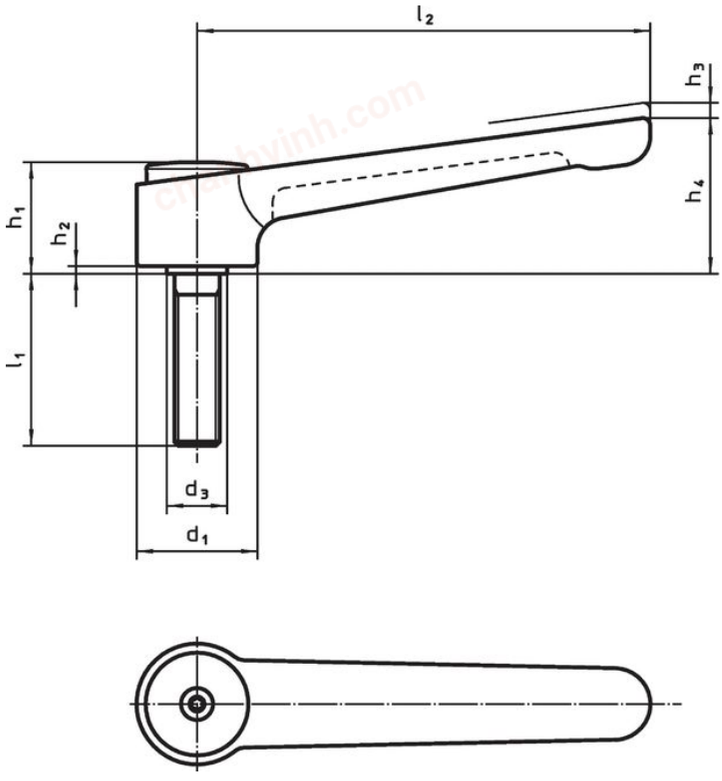

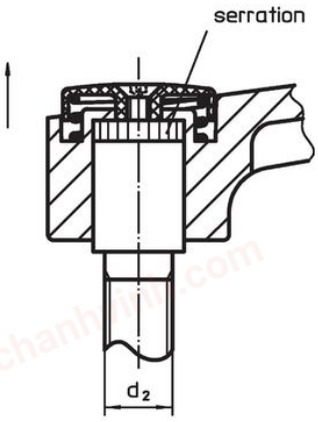

Order information

Dimensions												Art. No.
d_1	d_2	l_1	d_3	h_1	h_2	h_3	h_4	l_2	min. [°C]	max. [°C]	[g]	
				[mm]								
black												
32	**M10**	**20**	16	29.5	2	2.5	41.5	120	-30	80	209	**24441.0450**
32	**M10**	**25**	16	29.5	2	2.5	41.5	120	-30	80	208	**24441.0455**
32	**M10**	**32**	16	29.5	2	2.5	41.5	120	-30	80	207	**24441.0460**
32	**M10**	**40**	16	29.5	2	2.5	41.5	120	-30	80	210	**24441.0465**
32	**M10**	**50**	16	29.5	2	2.5	41.5	120	-30	80	220	**24441.0470**

chanhvinh.com

Dimensions												Art. No.
d_1	d_2	l_1	d_3	h_1	h_2	h_3	h_4	l_2	min.	max.		
[mm]									[°C]		[g]	
32	**M10**	**63**	16	29.5	2	2.5	41.5	120	-30	80	226	24441.0475
32	**M10**	**80**	16	29.5	2	2.5	41.5	120	-30	80	231	24441.0480
32	**M12**	**20**	16	29.5	2	2.5	41.5	120	-30	80	207	24441.0485
32	**M12**	**25**	16	29.5	2	2.5	41.5	120	-30	80	211	24441.0490
32	**M12**	**32**	16	29.5	2	2.5	41.5	120	-30	80	215	24441.0495
32	**M12**	**40**	16	29.5	2	2.5	41.5	120	-30	80	220	24441.0500
32	**M12**	**50**	16	29.5	2	2.5	41.5	120	-30	80	228	24441.0505
32	**M12**	**63**	16	29.5	2	2.5	41.5	120	-30	80	238	24441.0510
32	**M12**	**80**	16	29.5	2	2.5	41.5	120	-30	80	251	24441.0515
40	**M12**	**32**	23	42.0	4	4.0	56.0	145	-30	80	440	24441.0525
40	**M12**	**40**	23	42.0	4	4.0	56.0	145	-30	80	446	24441.0530
40	**M12**	**50**	23	42.0	4	4.0	56.0	145	-30	80	450	24441.0535
40	**M12**	**63**	23	42.0	4	4.0	56.0	145	-30	80	461	24441.0540
40	**M12**	**80**	23	42.0	4	4.0	56.0	145	-30	80	477	24441.0545
40	**M16**	**32**	23	42.0	4	4.0	56.0	145	-30	80	461	24441.0550
40	**M16**	**40**	23	42.0	4	4.0	56.0	145	-30	80	472	24441.0555
40	**M16**	**50**	23	42.0	4	4.0	56.0	145	-30	80	482	24441.0560
40	**M16**	**63**	23	42.0	4	4.0	56.0	145	-30	80	498	24441.0565
40	**M16**	**80**	23	42.0	4	4.0	56.0	145	-30	80	523	24441.0570
silver												
32	**M10**	**20**	16	29.5	2	2.5	41.5	120	-30	80	201	24441.0850
32	**M10**	**25**	16	29.5	2	2.5	41.5	120	-30	80	206	24441.0855
32	**M10**	**32**	16	29.5	2	2.5	41.5	120	-30	80	206	24441.0860
32	**M10**	**40**	16	29.5	2	2.5	41.5	120	-30	80	213	24441.0865
32	**M10**	**50**	16	29.5	2	2.5	41.5	120	-30	80	218	24441.0870
32	**M10**	**63**	16	29.5	2	2.5	41.5	120	-30	80	222	24441.0875
32	**M10**	**80**	16	29.5	2	2.5	41.5	120	-30	80	232	24441.0880
32	**M12**	**20**	16	29.5	2	2.5	41.5	120	-30	80	205	24441.0885
32	**M12**	**25**	16	29.5	2	2.5	41.5	120	-30	80	208	24441.0890
32	**M12**	**32**	16	29.5	2	2.5	41.5	120	-30	80	216	24441.0895
32	**M12**	**40**	16	29.5	2	2.5	41.5	120	-30	80	222	24441.0900
32	**M12**	**50**	16	29.5	2	2.5	41.5	120	-30	80	231	24441.0905
32	**M12**	**63**	16	29.5	2	2.5	41.5	120	-30	80	234	24441.0910
32	**M12**	**80**	16	29.5	2	2.5	41.5	120	-30	80	250	24441.0915
40	**M12**	**32**	23	42.0	4	4.0	56.0	145	-30	80	435	24441.0925
40	**M12**	**40**	23	42.0	4	4.0	56.0	145	-30	80	440	24441.0930
40	**M12**	**50**	23	42.0	4	4.0	56.0	145	-30	80	450	24441.0935
40	**M12**	**63**	23	42.0	4	4.0	56.0	145	-30	80	459	24441.0940
40	**M12**	**80**	23	42.0	4	4.0	56.0	145	-30	80	475	24441.0945
40	**M16**	**32**	23	42.0	4	4.0	56.0	145	-30	80	459	24441.0950
40	**M16**	**40**	23	42.0	4	4.0	56.0	145	-30	80	480	24441.0955
40	**M16**	**50**	23	42.0	4	4.0	56.0	145	-30	80	480	24441.0960
40	**M16**	**63**	23	42.0	4	4.0	56.0	145	-30	80	497	24441.0965
40	**M16**	**80**	23	42.0	4	4.0	56.0	145	-30	80	518	24441.0970

chanhvinh.com

Application example

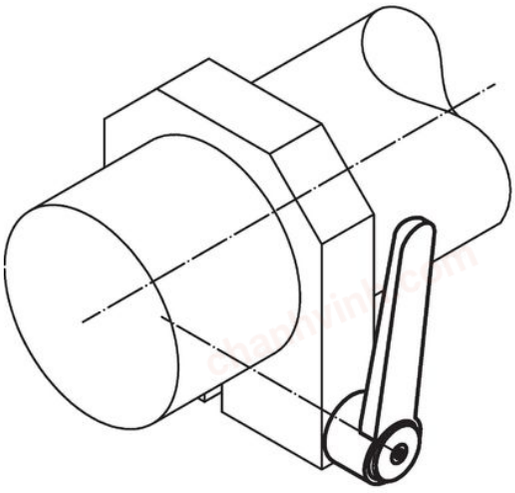

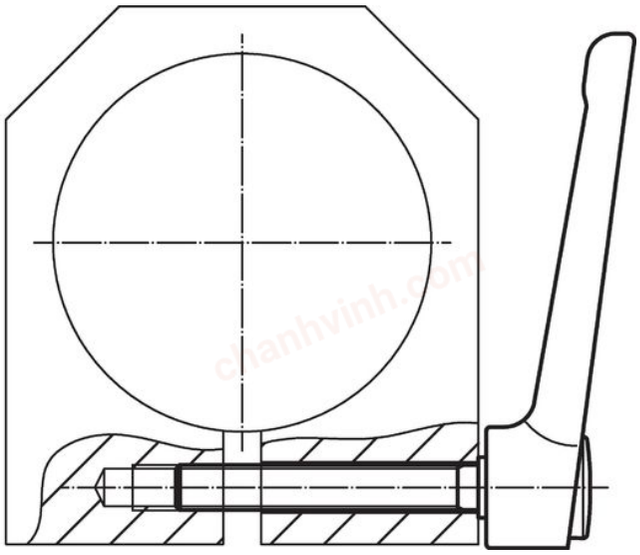

Compliance

For detailed compliance information please select the desired article number.

chanhvinh.com