chanhvinh.com

Adjustable Flat Tension Levers

EH 24441.



Product Description

Adjustable flat tension levers are used when the swivel range is limited or a specific lever position is required.
Adjustable flat tension levers are characterised by their low construction height and are particularly suitable for use in restricted spaces or when the lever should not overhang..

Material

Lever
- Zinc die-cast, plastic coated, black, similar to RAL 9005, matt structure
- Zinc die-cast, plastic coated, silver, similar to RAL 9006, matt structure

Inner parts
- Steel, blackened

Covering
- Plastic, black
- Plastic, light grey

Operation

By lifting the lever the serrations are disengaged. The lever can be positioned by the serrations. On releasing the lever, the serrations are automatically re-engaged.

Drawing

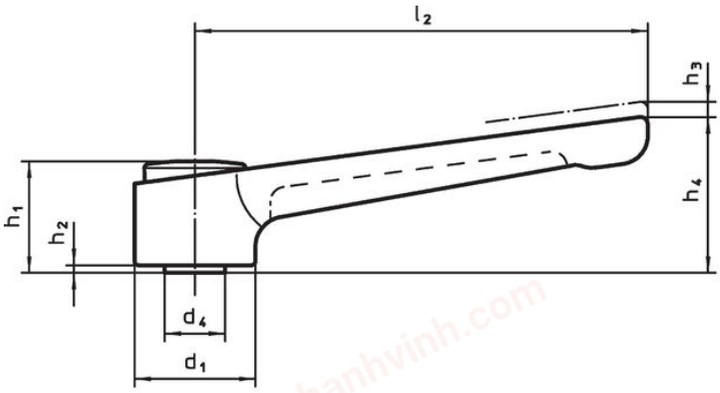



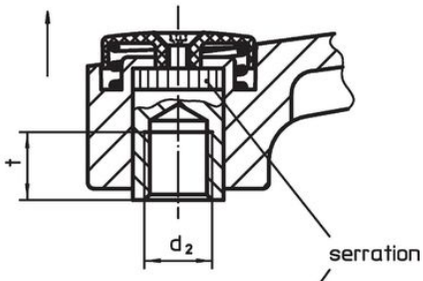

picture 1

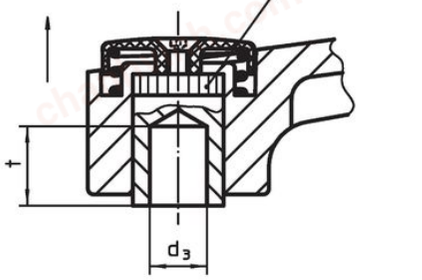

picture 2

Order information

Dimensions												Art. No.
d_1	d_2	d_3 H7	d_4	h_1	h_2	h_3	h_4	l_2	t min.	min.	max.	
[mm]										[°C]		[g]	
with female thread – picture 1, black													
32	**M 8**	–	16	29.5	2	2.5	41.5	120	14	-30	80	186	24441.0005
32	**M10**	–	16	29.5	2	2.5	41.5	120	14	-30	80	183	24441.0010
32	**M12**	–	16	29.5	2	2.5	41.5	120	14	-30	80	182	24441.0015
40	**M12**	–	23	42.0	4	4.0	56.0	145	22	-30	80	399	24441.0020
40	**M16**	–	23	42.0	4	4.0	56.0	145	22	-30	80	384	24441.0025

chanhvinh.com

Dimensions												Art. No.
d_1	d_2	d_3 H7	d_4	h_1	h_2	h_3	h_4	l_2	t min.	min.	max.	
[mm]										[°C]		[g]	
with female thread – picture 1, silver													
32	**M 8**	**–**	16	29.5	2	2.5	41.5	120	14	-30	80	190	24441.0105
32	**M10**	**–**	16	29.5	2	2.5	41.5	120	14	-30	80	184	24441.0110
32	**M12**	**–**	16	29.5	2	2.5	41.5	120	14	-30	80	182	24441.0115
40	**M12**	**–**	23	42.0	4	4.0	56.0	145	22	-30	80	396	24441.0120
40	**M16**	**–**	23	42.0	4	4.0	56.0	145	22	-30	80	380	24441.0125
with smooth bore – picture 2, black													
32	**–**	**8**	16	29.5	2	2.5	41.5	120	14	-30	80	188	24441.0050
32	**–**	**10**	16	29.5	2	2.5	41.5	120	14	-30	80	185	24441.0055
40	**–**	**12**	23	42.0	4	4.0	56.0	145	22	-30	80	394	24441.0060
40	**–**	**16**	23	42.0	4	4.0	56.0	145	22	-30	80	373	24441.0065
with smooth bore – picture 2, silver													
32	**–**	**8**	16	29.5	2	2.5	41.5	120	14	-30	80	188	24441.0150
32	**–**	**10**	16	29.5	2	2.5	41.5	120	14	-30	80	182	24441.0155
40	**–**	**12**	23	42.0	4	4.0	56.0	145	22	-30	80	393	24441.0160
40	**–**	**16**	23	42.0	4	4.0	56.0	145	22	-30	80	374	24441.0165

Application example

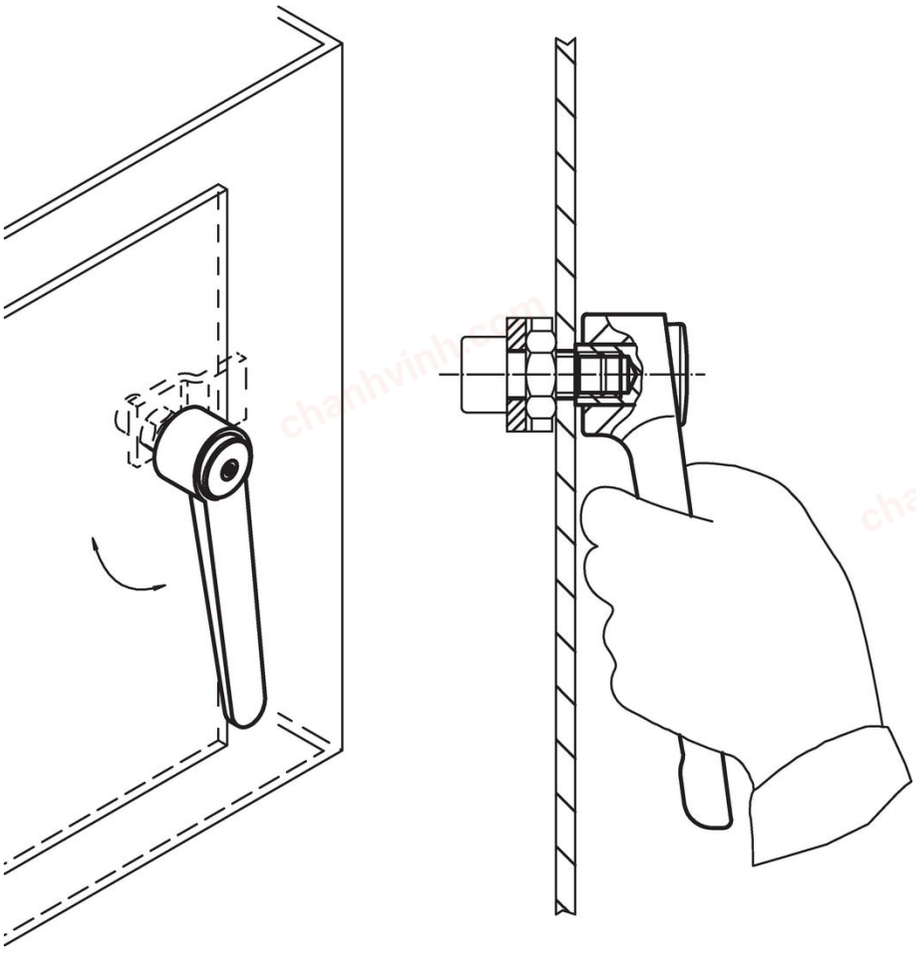

Compliance

For detailed compliance information please select the desired article number.