chanhvinh.com

Tension Levers

EH 24430.



Product Description

Material

Lever
- Steel, blackened
- Stainless steel 1.4305, dull blasted

Ball knob
- Thermosetting plastic PF 31, black, DIN 319

Drawing

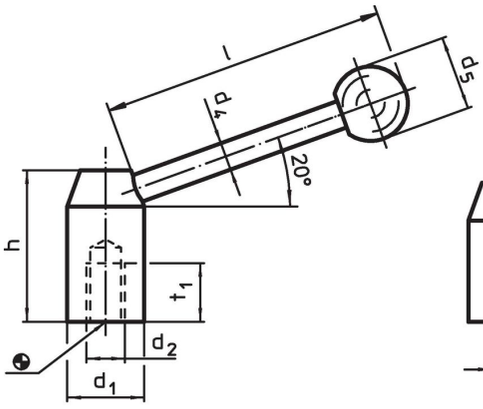

picture 1

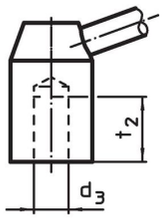

picture 2

Order information

Dimensions										Art. No.
d_1	d_2	d_3 H7	d_4	d_5	h	l ~	t_1	t_2	[g]	
				[mm]						
with female thread – picture 1, Steel										
20	**M 8**	**–**	8	20	33	67	15	–	97	24430.0022
22	**M10**	**–**	8	20	37	85	15	–	115	24430.0032
25	**M12**	**–**	10	25	42	95	18	–	165	24430.0038
28	**M12**	**–**	12	30	47	108	18	–	262	24430.0042
32	**M16**	**–**	12	32	52	126	23	–	354	24430.0048
36	**M16**	**–**	14	35	58	138	24	–	519	24430.0052
40	**M20**	**–**	16	40	64	154	27	–	711	24430.0058
with smooth bore – picture 2, Steel										
20	–	**10**	8	20	33	67	–	16	85	24430.0020
22	–	**10**	8	20	37	85	–	19	113	24430.0030
25	–	**12**	10	25	42	95	–	21	170	24430.0035
28	–	**12**	12	30	47	108	–	23	268	24430.0040
32	–	**16**	12	32	52	126	–	28	351	24430.0045
36	–	**16**	14	35	58	138	–	28	524	24430.0050
40	–	**20**	16	40	64	154	–	30	706	24430.0055
with female thread – picture 1, Stainless steel										
22	**M 8**	**–**	8	20	37	85	15	–	121	24430.0230
25	**M10**	**–**	10	25	42	95	18	–	186	24430.0236
28	**M12**	**–**	12	30	47	108	18	–	245	24430.0242
32	**M16**	**–**	12	32	52	126	23	–	352	24430.0248

chanhvinh.com

Application example

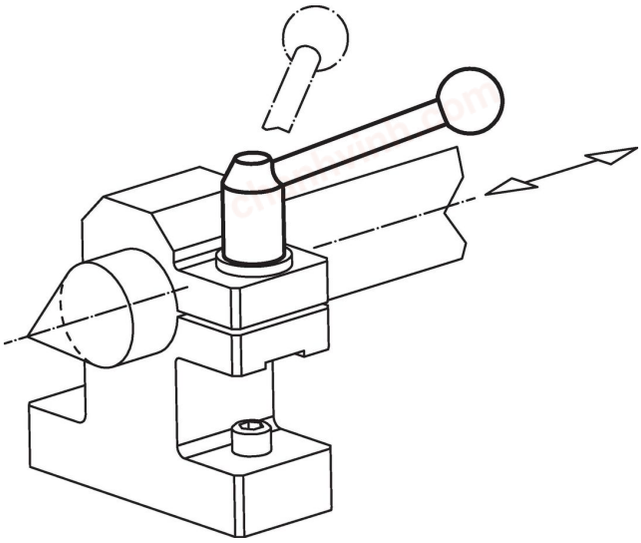

Compliance

For detailed compliance information please select the desired article number.