chanhvinh.com

Adjustable Clamping Levers • with axial bearing from stainless steel, with screw

EH 24420.



Product Description

Adjustable clamping levers with rust-proof inner parts. Suitable for multiple applications, e.g. medical environments, chemical industry, and so on.
Advantages of axial bearing:
- Double clamping force with same lever size, by reducing the surface friction.
- Protection of workpiece by a fixed locating surface.
- Little setting due to higher pre-clamping force of bolt, e.g. thread.

Material

Lever
- Zinc die-cast, plastic coated, orange similar to RAL 2004, matt structure
- Zinc die-cast, plastic coated, black, similar to RAL 9005, matt structure

Inner parts
- Stainless steel

Screw
- Stainless steel

Operation

By lifting the lever the serrations are disengaged. The lever can be positioned by the serrations. On releasing the lever, the serrations are automatically re-engaged.

Drawing

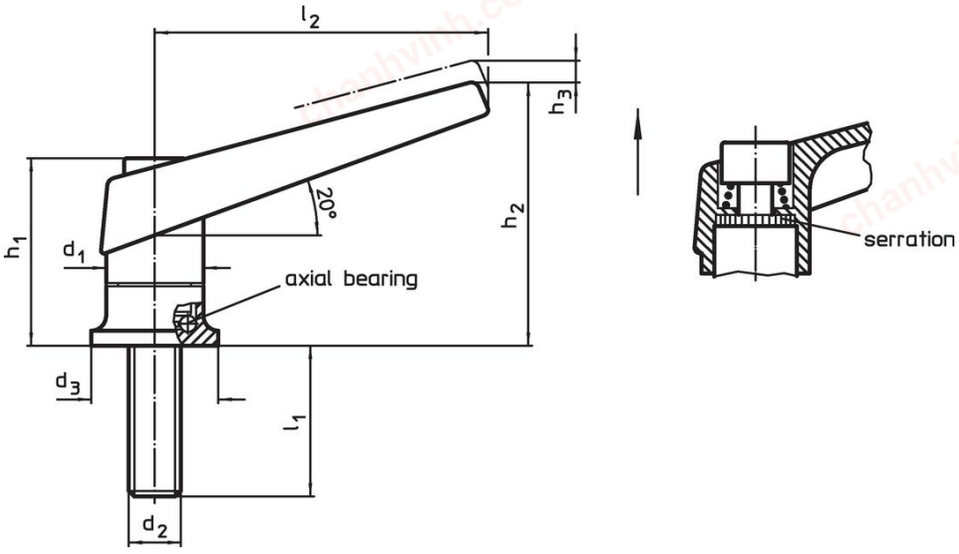

Order information

Dimensions									Art. No.
d_1	d_2	l_1	d_3	h_1	h_2	h_3	l_2	[g]	
				[mm]					
orange									
18	**M 6**	**20**	24	34.5	50	3.0	62	96	24420.1030
18	**M 6**	**27**	24	34.5	50	3.0	62	99	24420.1050
22	**M 8**	**21**	25	39.5	56	3.5	74	148	24420.1130
22	**M 8**	**36**	25	39.5	56	3.5	74	154	24420.1150
25	**M10**	**29**	30	46.5	66	4.0	89	228	24420.1230
25	**M10**	**47**	30	46.5	66	4.0	89	239	24420.1250
30	**M12**	**34**	35	56.5	82	5.0	108	402	24420.1330
30	**M12**	**50**	35	56.5	82	5.0	108	414	24420.1346
30	**M12**	**57**	35	56.5	82	5.0	108	420	24420.1350
30	**M12**	**65**	35	56.5	82	5.0	108	430	24420.1364
30	**M12**	**85**	35	56.5	82	5.0	108	444	24420.1384

chanhvinh.com

Dimensions									Art. No.
d_1	d_2	l_1	d_3	h_1	h_2	h_3	l_2	[g]	
				[mm]					
black									
18	**M 6**	**20**	24	34.5	50	3.0	62	96	24420.1032
18	**M 6**	**27**	24	34.5	50	3.0	62	98	24420.1052
22	**M 8**	**21**	25	39.5	56	3.5	74	148	24420.1132
22	**M 8**	**36**	25	39.5	56	3.5	74	153	24420.1152
25	**M10**	**29**	30	46.5	66	4.0	89	227	24420.1232
25	**M10**	**47**	30	46.5	66	4.0	89	240	24420.1252
30	**M12**	**34**	35	56.5	82	5.0	108	404	24420.1332
30	**M12**	**50**	35	56.5	82	5.0	108	414	24420.1348
30	**M12**	**57**	35	56.5	82	5.0	108	423	24420.1352
30	**M12**	**65**	35	56.5	82	5.0	108	429	24420.1366
30	**M12**	**85**	35	56.5	82	5.0	108	444	24420.1386

Application example

Increase of clamping force with axial bearing (while manual force is unchanged)

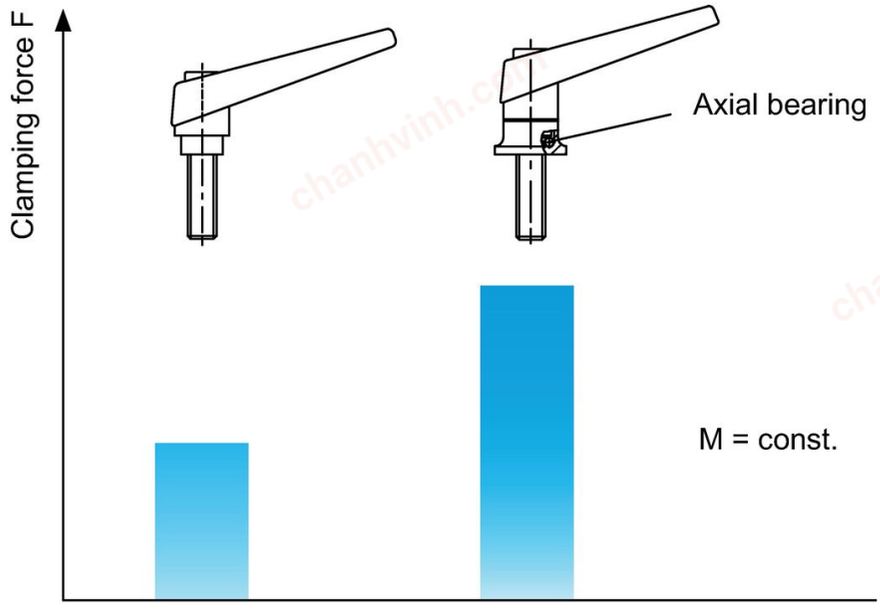

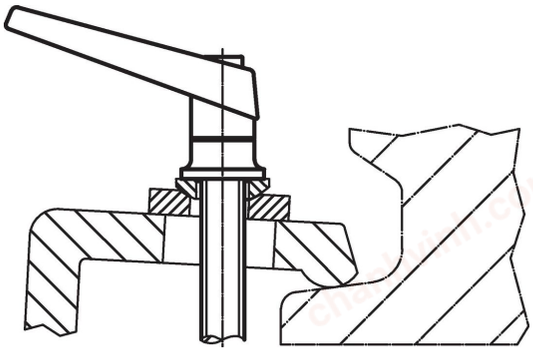

Compliance

For detailed compliance information please select the desired article number.