chanhvinh.com

Adjustable Clamping Levers • with axial bearing from stainless steel, with female thread
EH 24420.



Product Description

Adjustable clamping levers with rust-proof inner parts. Suitable for multiple applications, e.g. medical environments, chemical industry, and so on.
Advantages of axial bearing:
- Double clamping force with same lever size, by reducing the surface friction.
- Protection of workpiece by a fixed locating surface.
- Little setting due to higher pre-clamping force of bolt, e.g. thread.

Material

Lever
- Zinc die-cast, plastic coated, orange similar to RAL 2004, matt structure
- Zinc die-cast, plastic coated, black, similar to RAL 9005, matt structure

Threaded part
- Stainless steel

Inner parts
- Stainless steel

Operation

By lifting the lever the serrations are disengaged. The lever can be positioned by the serrations. On releasing the lever, the serrations are automatically re-engaged.

Drawing

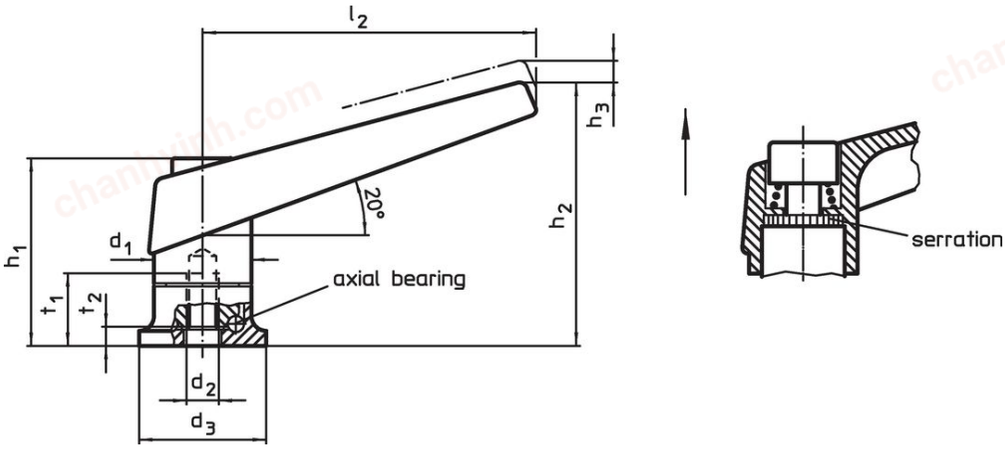

Order information

Dimensions										Art. No.
d_1	d_2	d_3	h_1	h_2	h_3	l_2	t_1 min.	t_2	[g]	
				[mm]						
orange										
18	**M 6**	24	34.5	50	3.0	62	12.5	5.0	90	24420.1010
22	**M 8**	25	39.5	56	3.5	74	14.0	4.2	136	24420.1110
25	**M10**	30	46.5	66	4.0	89	18.0	5.4	204	24420.1210
30	**M12**	35	56.5	82	5.0	108	26.5	6.6	359	24420.1310
black										
18	**M 6**	24	34.5	50	3.0	62	12.5	5.0	90	24420.1012
22	**M 8**	25	39.5	56	3.5	74	14.0	4.2	136	24420.1112
25	**M10**	30	46.5	66	4.0	89	18.0	5.4	206	24420.1212
30	**M12**	35	56.5	82	5.0	108	26.5	6.6	358	24420.1312

chanhvinh.com

Application example

Increase of clamping force with axial bearing (while manual force is unchanged)

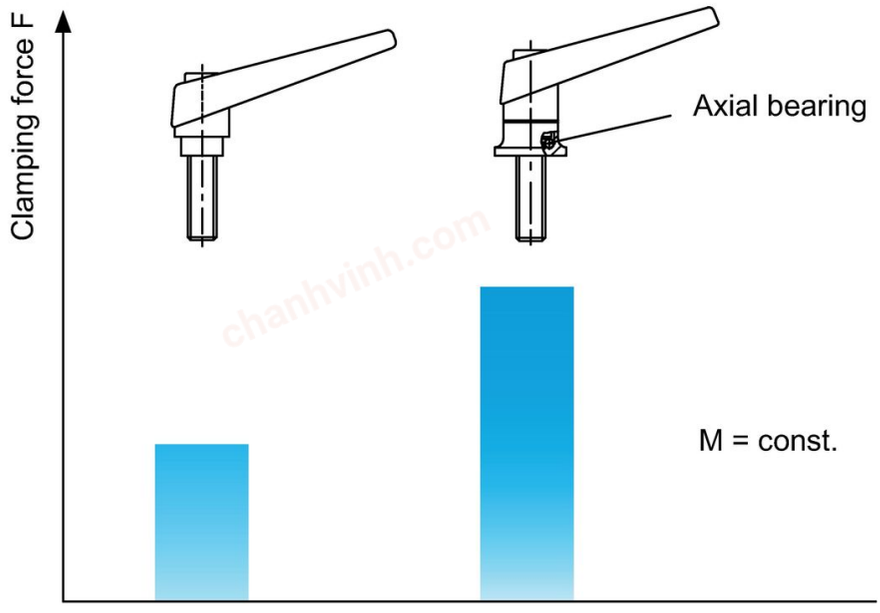

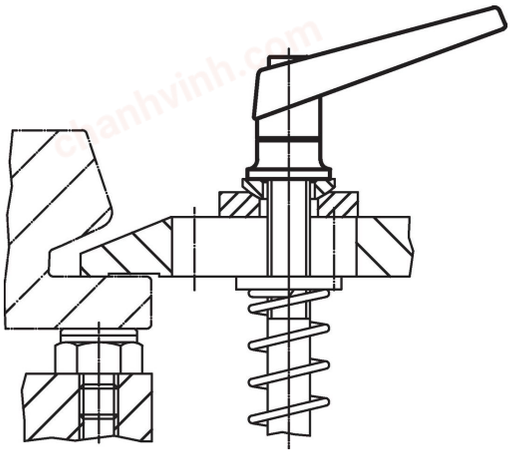

Compliance

For detailed compliance information please select the desired article number.