chanhvinh.com

Adjustable Clamping Levers • with axial bearing, with screw

EH 24420.



Product Description

Adjustable clamping levers find versatile applications when the area of use is confined or a specific lever position is required.
Advantages of axial bearing:
- Double clamping force with same lever size, by reducing the surface friction.
- Protection of workpiece by a fixed locating surface.
- Little setting due to higher pre-clamping force of bolt, e.g. thread.

Material

Lever
- Zinc die-cast, plastic coated, orange similar to RAL 2004, matt structure
- Zinc die-cast, plastic coated, black, similar to RAL 9005, matt structure

Inner parts
- Steel, nitrided, blackened

Screw
- Steel, nitrided, blackened

Operation

By lifting the lever the serrations are disengaged. The lever can be positioned by the serrations. On releasing the lever, the serrations are automatically re-engaged.

Drawing

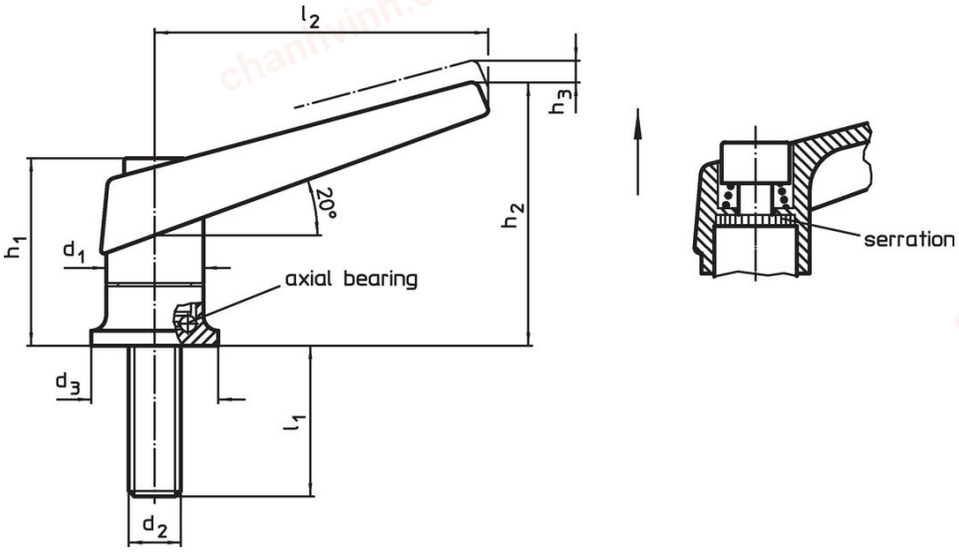

Order information

d1	d2	l1	d3	h1	h2	h3	l2		Art. No.
				Dimensions [mm]				[g]	
orange									
18	**M 6**	**20**	24	34.5	50	3.0	62	97	24420.0030
18	**M 6**	**27**	24	34.5	50	3.0	62	98	24420.0050
22	**M 8**	**21**	25	39.5	56	3.5	74	152	24420.0130
22	**M 8**	**36**	25	39.5	56	3.5	74	156	24420.0150
25	**M10**	**29**	30	46.5	66	4.0	89	232	24420.0230
25	**M10**	**47**	30	46.5	66	4.0	89	240	24420.0250
30	**M12**	**34**	35	56.5	82	5.0	108	409	24420.0330
30	**M12**	**50**	35	56.5	82	5.0	108	419	24420.0346
30	**M12**	**57**	35	56.5	82	5.0	108	423	24420.0350
30	**M12**	**65**	35	56.5	82	5.0	108	431	24420.0364
30	**M12**	**85**	35	56.5	82	5.0	108	446	24420.0384

chanhvinh.com

Dimensions [mm]								[g]	Art. No.
d_1	d_2	l_1	d_3	h_1	h_2	h_3	l_2		
black									
18	**M 6**	**20**	24	34.5	50	3.0	62	97	24420.0032
18	**M 6**	**27**	24	34.5	50	3.0	62	99	24420.0052
22	**M 8**	**21**	25	39.5	56	3.5	74	152	24420.0132
22	**M 8**	**36**	25	39.5	56	3.5	74	156	24420.0152
25	**M10**	**29**	30	46.5	66	4.0	89	231	24420.0232
25	**M10**	**47**	30	46.5	66	4.0	89	240	24420.0252
30	**M12**	**34**	35	56.5	82	5.0	108	407	24420.0332
30	**M12**	**50**	35	56.5	82	5.0	108	420	24420.0348
30	**M12**	**57**	35	56.5	82	5.0	108	423	24420.0352
30	**M12**	**65**	35	56.5	82	5.0	108	431	24420.0366
30	**M12**	**85**	35	56.5	82	5.0	108	445	24420.0386

Application example

Increase of clamping force with axial bearing (while manual force is unchanged)

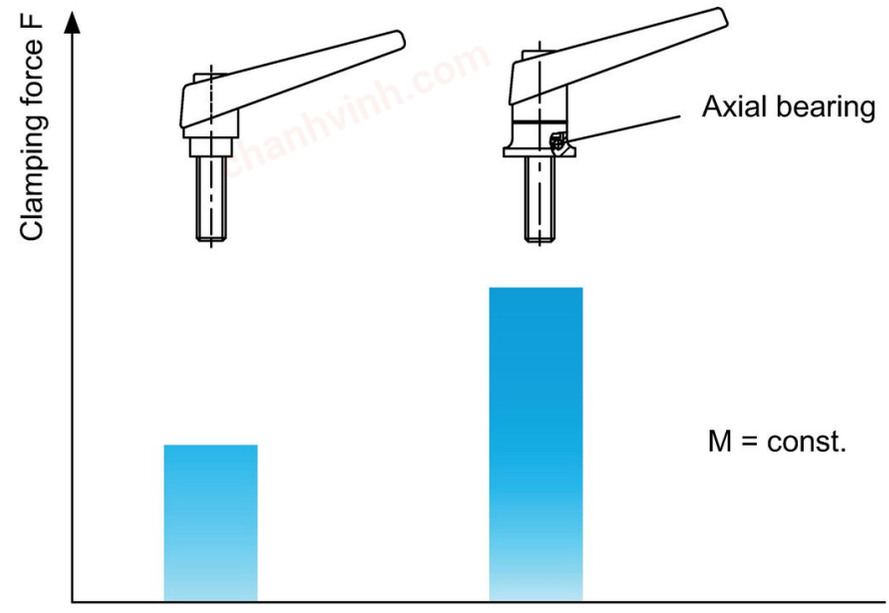

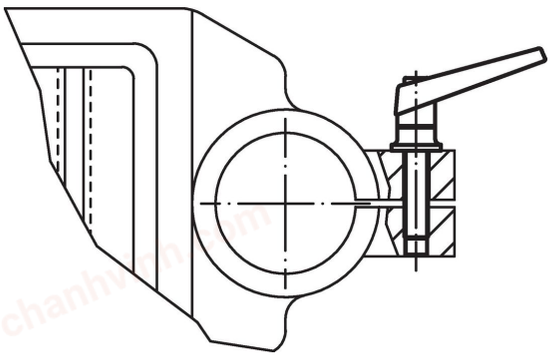

chanhvinh.com

Compliance

RoHS-compliant
Contains lead - compliant according to exceptions 6(a)-I / 6(b)-II / 6(c).

Contains SVHC substances >0,1% w/w
Contains lead - SVHC list [REACH] as of 04.02.2026.

SCIP-code
0d32cc30-5203-4c2e-b8ba-2e67af3e97f5

Contains Proposition 65 substances



Lead can lead to cancer, developmental disorders, and reproductive damage in men and to reproductive damage in women from exposure. Nickel can cause cancer from exposure.
https://www.P65Warnings.ca.gov/

Free from Conflict Minerals
This product does not contain any substances designated as "conflict minerals" such as tantalum, tin, gold or tungsten from the Democratic Republic of Congo or adjacent countries.

POP-compliant
Contains no persistent organic pollutants – Stockholm Convention [POP] as of September 2025.

PFAS-compliant
Contains no per- and polyfluoroalkyl substances (PFAS).

TSCA-compliant
Agent concentration in this product does not exceed the specified threshold.