chanhvinh.com

Adjustable Clamping Levers • with axial bearing, with female thread
EH 24420.



Product Description

Adjustable clamping levers find versatile applications when the area of use is confined or a specific lever position is required.
Advantages of axial bearing:
- Double clamping force with same lever size, by reducing the surface friction.
- Protection of workpiece by a fixed locating surface.
- Little setting due to higher pre-clamping force of bolt, e.g. thread.

Material

Lever
- Zinc die-cast, plastic coated, orange similar to RAL 2004, matt structure
- Zinc die-cast, plastic coated, black, similar to RAL 9005, matt structure

Threaded part
- Steel, nitrided, blackened

Inner parts
- Steel, nitrided, blackened

Operation

By lifting the lever the serrations are disengaged. The lever can be positioned by the serrations. On releasing the lever, the serrations are automatically re-engaged.

Drawing

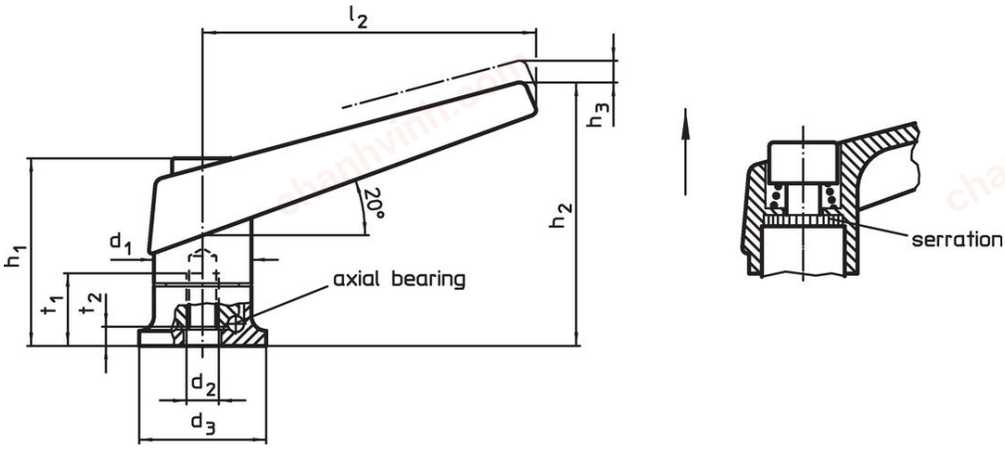

Order information

d1	d2	d3	h1	h2	h3	l2	t1 min.	t2	[g]	Art. No.
				Dimensions [mm]						
orange										
18	**M 6**	24	34.5	50	3.0	62	12.5	5.0	91	24420.0010
22	**M 8**	25	39.5	56	3.5	74	14.0	4.2	138	24420.0110
25	**M10**	30	46.5	66	4.0	89	18.0	5.4	205	24420.0210
30	**M12**	35	56.5	82	5.0	108	26.5	6.6	359	24420.0310
black										
18	**M 6**	24	34.5	50	3.0	62	12.5	5.0	91	24420.0012
22	**M 8**	25	39.5	56	3.5	74	14.0	4.2	138	24420.0112
25	**M10**	30	46.5	66	4.0	89	18.0	5.4	206	24420.0212
30	**M12**	35	56.5	82	5.0	108	26.5	6.6	358	24420.0312

chanhvinh.com

Application example

Increase of clamping force with axial bearing (while manual force is unchanged)

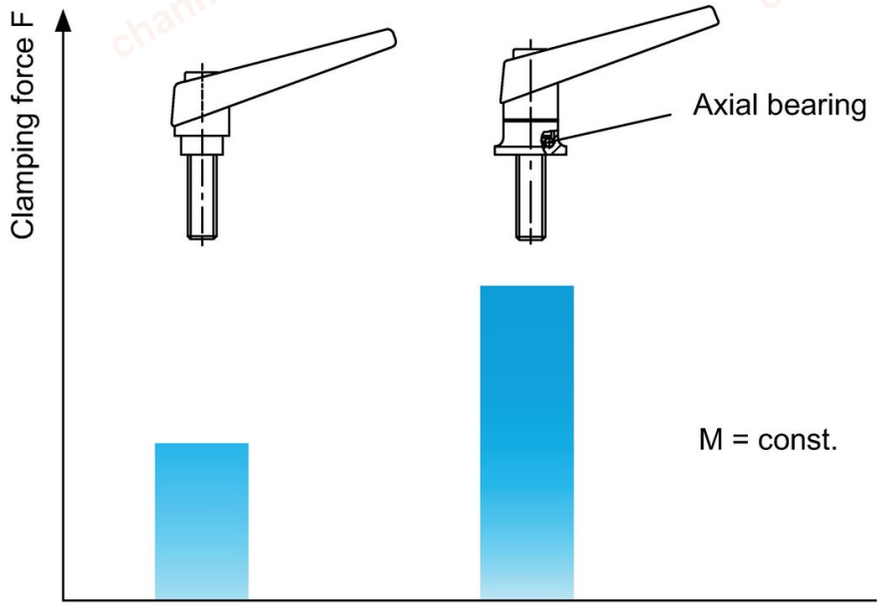

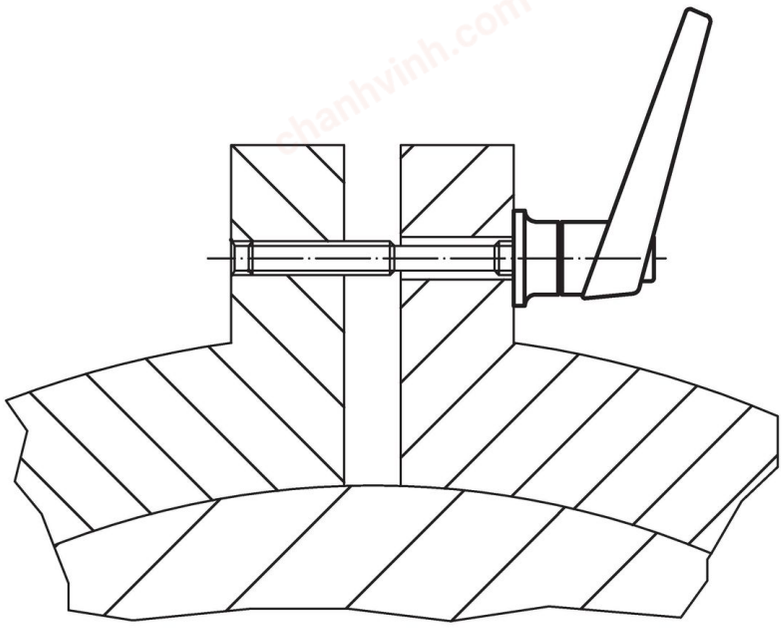

chanhvinh.com

Compliance

RoHS-compliant
Contains lead - compliant according to exceptions 6(a)-I / 6(b)-II / 6(c).

Contains SVHC substances >0,1% w/w
Contains lead - SVHC list [REACH] as of 04.02.2026.

SCIP-code
4d5edd4a-3945-4805-acd6-9ed4b5006f4c

Contains Proposition 65 substances



Lead can lead to cancer, developmental disorders, and reproductive damage in men and to reproductive damage in women from exposure. Nickel can cause cancer from exposure.
https://www.P65Warnings.ca.gov/

Free from Conflict Minerals
This product does not contain any substances designated as "conflict minerals" such as tantalum, tin, gold or tungsten from the Democratic Republic of Congo or adjacent countries.

POP-compliant
Contains no persistent organic pollutants – Stockholm Convention [POP] as of September 2025.

PFAS-compliant
Contains no per- and polyfluoroalkyl substances (PFAS).

TSCA-compliant
Agent concentration in this product does not exceed the specified threshold.