chanhvinh.com

Adjustable Clamping Levers • with screw

EH 24400.



Product Description

Adjustable clamping levers find versatile applications when the area of use is confined or a specific lever position is required.

Material

Lever
- Zinc die-cast, plastic coated, orange similar to RAL 2004, matt structure
- Zinc die-cast, plastic coated, silver, similar to RAL 9006, matt structure
- Zinc die-cast, plastic coated, black, similar to RAL 9005, matt structure

Inner parts
- Steel, blackened, quality 5.8

Screw
- Steel, blackened, quality 5.8

Operation

By lifting the lever the serrations are disengaged. The lever can be positioned by the serrations. On releasing the lever, the serrations are automatically re-engaged.

More information

Notes

The screw part can be exchanged.

Drawing

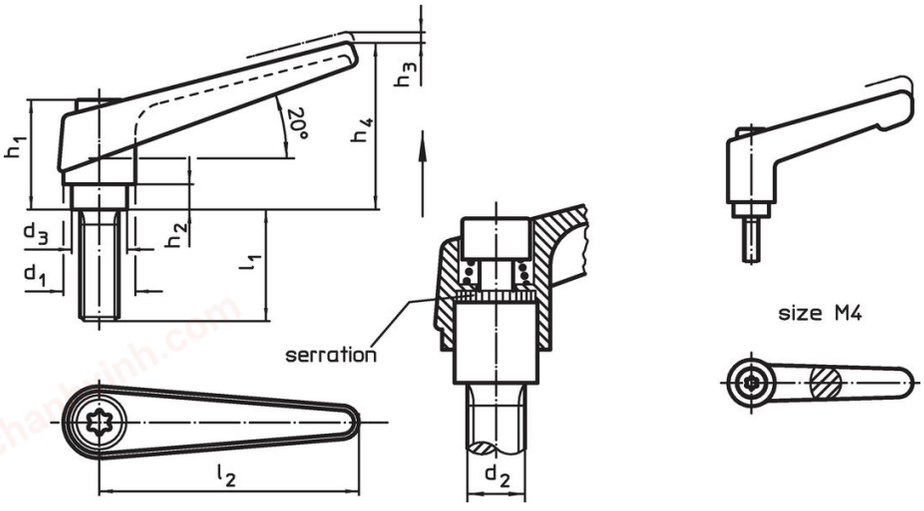

Order information

d1	d2	l1	d3	Dimensions h1 [mm]	h2	h3	h4	l2	[g]	Art. No.
orange										
13	**M 4**	**12**	10.0	24.5	4.0	3.5	30.5	30	27.0	24400.0010
13	**M 4**	**16**	10.0	24.5	4.0	3.5	30.5	30	27.0	24400.0014
13	**M 4**	**20**	10.0	24.5	4.0	3.5	30.5	30	28.0	24400.0018
13	**M 4**	**25**	10.0	24.5	4.0	3.5	30.5	30	28.0	24400.0022
13	**M 4**	**32**	10.0	24.5	4.0	3.5	30.5	30	28.0	24400.0026
14	**M 5**	**12**	10.0	24.5	4.0	3.0	35.0	45	36.0	24400.0041
14	**M 5**	**16**	10.0	24.5	4.0	3.0	35.0	45	36.0	24400.0051
14	**M 5**	**20**	10.0	24.5	4.0	3.0	35.0	45	37.0	24400.0061
14	**M 5**	**25**	10.0	24.5	4.0	3.0	35.0	45	38.0	24400.0071
14	**M 5**	**32**	10.0	24.5	4.0	3.0	35.0	45	38.0	24400.0081
14	**M 5**	**40**	10.0	24.5	4.0	3.0	35.0	45	39.0	24400.0086
14	**M 6**	**12**	10.0	24.5	4.0	3.0	35.0	45	37.0	24400.0131
14	**M 6**	**16**	10.0	24.5	4.0	3.0	35.0	45	37.0	24400.0141
14	**M 6**	**20**	10.0	24.5	4.0	3.0	35.0	45	39.0	24400.0151
14	**M 6**	**25**	10.0	24.5	4.0	3.0	35.0	45	41.0	24400.0161
14	**M 6**	**32**	10.0	24.5	4.0	3.0	35.0	45	40.0	24400.0171
14	**M 6**	**40**	10.0	24.5	4.0	3.0	35.0	45	41.0	24400.0181
14	**M 6**	**50**	10.0	24.5	4.0	3.0	35.0	45	3.1	24400.0191

chanhvinh.com

Dimensions										Art. No.
d_1	d_2	l_1	d_3	h_1	h_2	h_3	h_4	l_2		
[mm]									[g]	
18	**M 6**	**16**	13.5	31.0	6.5	3.0	45.0	62	72.0	**24400.0221**
18	**M 6**	**20**	13.5	31.0	6.5	3.0	45.0	62	72.0	**24400.0231**
18	**M 6**	**25**	13.5	31.0	6.5	3.0	45.0	62	74.0	**24400.0241**
18	**M 6**	**32**	13.5	31.0	6.5	3.0	45.0	62	74.0	**24400.0251**
18	**M 6**	**40**	13.5	31.0	6.5	3.0	45.0	62	76.0	**24400.0261**
18	**M 6**	**50**	13.5	31.0	6.5	3.0	45.0	62	76.0	**24400.0271**
18	**M 6**	**63**	13.5	31.0	6.5	3.0	45.0	62	80.0	**24400.0281**
18	**M 8**	**16**	13.5	31.0	6.5	3.0	45.0	62	74.0	**24400.0331**
18	**M 8**	**20**	13.5	31.0	6.5	3.0	45.0	62	76.0	**24400.0341**
18	**M 8**	**25**	13.5	31.0	6.5	3.0	45.0	62	86.0	**24400.0351**
18	**M 8**	**32**	13.5	31.0	6.5	3.0	45.0	62	86.0	**24400.0361**
18	**M 8**	**40**	13.5	31.0	6.5	3.0	45.0	62	88.0	**24400.0371**
18	**M 8**	**50**	13.5	31.0	6.5	3.0	45.0	62	90.0	**24400.0381**
18	**M 8**	**63**	13.5	31.0	6.5	3.0	45.0	62	96.0	**24400.0391**
22	**M10**	**20**	16.0	36.0	8.0	3.5	52.0	74	128.0	**24400.0441**
22	**M10**	**25**	16.0	36.0	8.0	3.5	52.0	74	130.0	**24400.0451**
22	**M10**	**32**	16.0	36.0	8.0	3.5	52.0	74	134.0	**24400.0461**
22	**M10**	**40**	16.0	36.0	8.0	3.5	52.0	74	138.0	**24400.0471**
22	**M10**	**50**	16.0	36.0	8.0	3.5	52.0	74	143.0	**24400.0481**
22	**M10**	**63**	16.0	36.0	8.0	3.5	52.0	74	152.0	**24400.0486**
22	**M10**	**80**	16.0	36.0	8.0	3.5	52.0	74	166.0	**24400.0491**
25	**M12**	**25**	19.0	43.0	11.0	4.0	63.0	89	205.0	**24400.0541**
25	**M12**	**32**	19.0	43.0	11.0	4.0	63.0	89	209.0	**24400.0551**
25	**M12**	**40**	19.0	43.0	11.0	4.0	63.0	89	215.0	**24400.0561**
25	**M12**	**50**	19.0	43.0	11.0	4.0	63.0	89	222.0	**24400.0571**
25	**M12**	**63**	19.0	43.0	11.0	4.0	63.0	89	232.0	**24400.0581**
25	**M12**	**80**	19.0	43.0	11.0	4.0	63.0	89	244.0	**24400.0591**
30	**M16**	**32**	23.0	50.5	12.0	5.0	76.0	108	348.0	**24400.0641**
30	**M16**	**40**	23.0	50.5	12.0	5.0	76.0	108	357.0	**24400.0651**
30	**M16**	**50**	23.0	50.5	12.0	5.0	76.0	108	370.0	**24400.0661**
30	**M16**	**63**	23.0	50.5	12.0	5.0	76.0	108	386.0	**24400.0671**
30	**M16**	**80**	23.0	50.5	12.0	5.0	76.0	108	407.0	**24400.0681**
silver										
14	**M 5**	**12**	10.0	24.5	4.0	3.0	35.0	45	36.0	**24400.0043**
14	**M 5**	**16**	10.0	24.5	4.0	3.0	35.0	45	36.0	**24400.0053**
14	**M 5**	**20**	10.0	24.5	4.0	3.0	35.0	45	37.0	**24400.0063**
14	**M 5**	**25**	10.0	24.5	4.0	3.0	35.0	45	38.0	**24400.0073**
14	**M 5**	**32**	10.0	24.5	4.0	3.0	35.0	45	38.0	**24400.0083**
14	**M 5**	**40**	10.0	24.5	4.0	3.0	35.0	45	39.0	**24400.0088**
14	**M 6**	**12**	10.0	24.5	4.0	3.0	35.0	45	37.0	**24400.0133**
14	**M 6**	**16**	10.0	24.5	4.0	3.0	35.0	45	37.0	**24400.0143**
14	**M 6**	**20**	10.0	24.5	4.0	3.0	35.0	45	38.0	**24400.0153**
14	**M 6**	**25**	10.0	24.5	4.0	3.0	35.0	45	39.0	**24400.0163**
14	**M 6**	**32**	10.0	24.5	4.0	3.0	35.0	45	40.0	**24400.0173**
14	**M 6**	**40**	10.0	24.5	4.0	3.0	35.0	45	41.0	**24400.0183**
14	**M 6**	**50**	10.0	24.5	4.0	3.0	35.0	45	43.0	**24400.0193**
18	**M 6**	**16**	13.5	31.0	6.5	3.0	45.0	62	72.0	**24400.0223**
18	**M 6**	**20**	13.5	31.0	6.5	3.0	45.0	62	72.0	**24400.0233**
18	**M 6**	**25**	13.5	31.0	6.5	3.0	45.0	62	74.0	**24400.0243**
18	**M 6**	**32**	13.5	31.0	6.5	3.0	45.0	62	74.0	**24400.0253**
18	**M 6**	**40**	13.5	31.0	6.5	3.0	45.0	62	76.0	**24400.0263**
18	**M 6**	**50**	13.5	31.0	6.5	3.0	45.0	62	76.0	**24400.0273**
18	**M 6**	**63**	13.5	31.0	6.5	3.0	45.0	62	80.0	**24400.0283**
18	**M 8**	**16**	13.5	31.0	6.5	3.0	45.0	62	74.0	**24400.0333**
18	**M 8**	**20**	13.5	31.0	6.5	3.0	45.0	62	76.0	**24400.0343**
18	**M 8**	**25**	13.5	31.0	6.5	3.0	45.0	62	77.0	**24400.0353**
18	**M 8**	**32**	13.5	31.0	6.5	3.0	45.0	62	83.0	**24400.0363**
18	**M 8**	**40**	13.5	31.0	6.5	3.0	45.0	62	81.0	**24400.0373**
18	**M 8**	**50**	13.5	31.0	6.5	3.0	45.0	62	84.0	**24400.0383**
18	**M 8**	**63**	13.5	31.0	6.5	3.0	45.0	62	89.0	**24400.0393**
22	**M10**	**20**	16.0	36.0	8.0	3.5	52.0	74	128.0	**24400.0443**
22	**M10**	**25**	16.0	36.0	8.0	3.5	52.0	74	130.0	**24400.0453**

chanhvinh.com

Dimensions										Art. No.
d_1	d_2	l_1	d_3	h_1	h_2	h_3	h_4	l_2		
				[mm]					[g]	
22	**M10**	**32**	16.0	36.0	8.0	3.5	52.0	74	134.0	24400.0463
22	**M10**	**40**	16.0	36.0	8.0	3.5	52.0	74	138.0	24400.0473
22	**M10**	**50**	16.0	36.0	8.0	3.5	52.0	74	143.0	24400.0483
22	**M10**	**63**	16.0	36.0	8.0	3.5	52.0	74	148.0	24400.0488
22	**M10**	**80**	16.0	36.0	8.0	3.5	52.0	74	157.0	24400.0493
25	**M12**	**25**	19.0	43.0	11.0	4.0	63.0	89	205.0	24400.0543
25	**M12**	**32**	19.0	43.0	11.0	4.0	63.0	89	209.0	24400.0553
25	**M12**	**40**	19.0	43.0	11.0	4.0	63.0	89	215.0	24400.0563
25	**M12**	**50**	19.0	43.0	11.0	4.0	63.0	89	222.0	24400.0573
25	**M12**	**63**	19.0	43.0	11.0	4.0	63.0	89	232.0	24400.0583
25	**M12**	**80**	19.0	43.0	11.0	4.0	63.0	89	244.0	24400.0593
30	**M16**	**32**	23.0	50.5	12.0	5.0	76.0	108	348.0	24400.0643
30	**M16**	**40**	23.0	50.5	12.0	5.0	76.0	108	357.0	24400.0653
30	**M16**	**50**	23.0	50.5	12.0	5.0	76.0	108	370.0	24400.0663
30	**M16**	**63**	23.0	50.5	12.0	5.0	76.0	108	412.0	24400.0673
30	**M16**	**80**	23.0	50.5	12.0	5.0	76.0	108	407.0	24400.0683
black										
13	**M 4**	**12**	10.0	24.5	4.0	3.5	30.5	30	20.0	24400.0012
13	**M 4**	**16**	10.0	24.5	4.0	3.5	30.5	30	20.0	24400.0016
13	**M 4**	**20**	10.0	24.5	4.0	3.5	30.5	30	20.0	24400.0020
13	**M 4**	**25**	10.0	24.5	4.0	3.5	30.5	30	28.0	24400.0024
13	**M 4**	**32**	10.0	24.5	4.0	3.5	30.5	30	28.0	24400.0028
14	**M 5**	**12**	10.0	24.5	4.0	3.0	35.0	45	36.0	24400.0044
14	**M 5**	**16**	10.0	24.5	4.0	3.0	35.0	45	36.0	24400.0054
14	**M 5**	**20**	10.0	24.5	4.0	3.0	35.0	45	37.0	24400.0064
14	**M 5**	**25**	10.0	24.5	4.0	3.0	35.0	45	38.0	24400.0074
14	**M 5**	**32**	10.0	24.5	4.0	3.0	35.0	45	38.0	24400.0084
14	**M 5**	**40**	10.0	24.5	4.0	3.0	35.0	45	39.0	24400.0089
14	**M 6**	**12**	10.0	24.5	4.0	3.0	35.0	45	37.0	24400.0134
14	**M 6**	**16**	10.0	24.5	4.0	3.0	35.0	45	37.0	24400.0144
14	**M 6**	**20**	10.0	24.5	4.0	3.0	35.0	45	38.0	24400.0154
14	**M 6**	**25**	10.0	24.5	4.0	3.0	35.0	45	39.0	24400.0164
14	**M 6**	**32**	10.0	24.5	4.0	3.0	35.0	45	40.0	24400.0174
14	**M 6**	**40**	10.0	24.5	4.0	3.0	35.0	45	41.0	24400.0184
14	**M 6**	**50**	10.0	24.5	4.0	3.0	35.0	45	43.0	24400.0194
18	**M 6**	**16**	13.5	31.0	6.5	3.0	45.0	62	72.0	24400.0224
18	**M 6**	**20**	13.5	31.0	6.5	3.0	45.0	62	78.0	24400.0234
18	**M 6**	**25**	13.5	31.0	6.5	3.0	45.0	62	74.0	24400.0244
18	**M 6**	**32**	13.5	31.0	6.5	3.0	45.0	62	74.0	24400.0254
18	**M 6**	**40**	13.5	31.0	6.5	3.0	45.0	62	76.0	24400.0264
18	**M 6**	**50**	13.5	31.0	6.5	3.0	45.0	62	76.0	24400.0274
18	**M 6**	**63**	13.5	31.0	6.5	3.0	45.0	62	80.0	24400.0284
18	**M 8**	**16**	13.5	31.0	6.5	3.0	45.0	62	87.0	24400.0334
18	**M 8**	**20**	13.5	31.0	6.5	3.0	45.0	62	80.0	24400.0344
18	**M 8**	**25**	13.5	31.0	6.5	3.0	45.0	62	81.0	24400.0354
18	**M 8**	**32**	13.5	31.0	6.5	3.0	45.0	62	85.0	24400.0364
18	**M 8**	**40**	13.5	31.0	6.5	3.0	45.0	62	81.0	24400.0374
18	**M 8**	**50**	13.5	31.0	6.5	3.0	45.0	62	84.0	24400.0384
18	**M 8**	**63**	13.5	31.0	6.5	3.0	45.0	62	89.0	24400.0394
22	**M10**	**20**	16.0	36.0	8.0	3.5	52.0	74	128.0	24400.0444
22	**M10**	**25**	16.0	36.0	8.0	3.5	52.0	74	130.0	24400.0454
22	**M10**	**32**	16.0	36.0	8.0	3.5	52.0	74	134.0	24400.0464
22	**M10**	**40**	16.0	36.0	8.0	3.5	52.0	74	140.0	24400.0474
22	**M10**	**50**	16.0	36.0	8.0	3.5	52.0	74	143.0	24400.0484
22	**M10**	**63**	16.0	36.0	8.0	3.5	52.0	74	156.0	24400.0489
22	**M10**	**80**	16.0	36.0	8.0	3.5	52.0	74	157.0	24400.0494
25	**M12**	**25**	19.0	43.0	11.0	4.0	63.0	89	205.0	24400.0544
25	**M12**	**32**	19.0	43.0	11.0	4.0	63.0	89	209.0	24400.0554
25	**M12**	**40**	19.0	43.0	11.0	4.0	63.0	89	215.0	24400.0564
25	**M12**	**50**	19.0	43.0	11.0	4.0	63.0	89	222.0	24400.0574
25	**M12**	**63**	19.0	43.0	11.0	4.0	63.0	89	232.0	24400.0584
25	**M12**	**80**	19.0	43.0	11.0	4.0	63.0	89	240.0	24400.0594

chanhvinh.com

Dimensions										Art. No.
d_1	d_2	l_1	d_3	h_1	h_2	h_3	h_4	l_2	[g]	
				[mm]						
30	**M16**	**32**	23.0	50.5	12.0	5.0	76.0	108	348.0	24400.0644
30	**M16**	**40**	23.0	50.5	12.0	5.0	76.0	108	357.0	24400.0654
30	**M16**	**50**	23.0	50.5	12.0	5.0	76.0	108	370.0	24400.0664
30	**M16**	**63**	23.0	50.5	12.0	5.0	76.0	108	386.0	24400.0674
30	**M16**	**80**	23.0	50.5	12.0	5.0	76.0	108	407.0	24400.0684

Application example

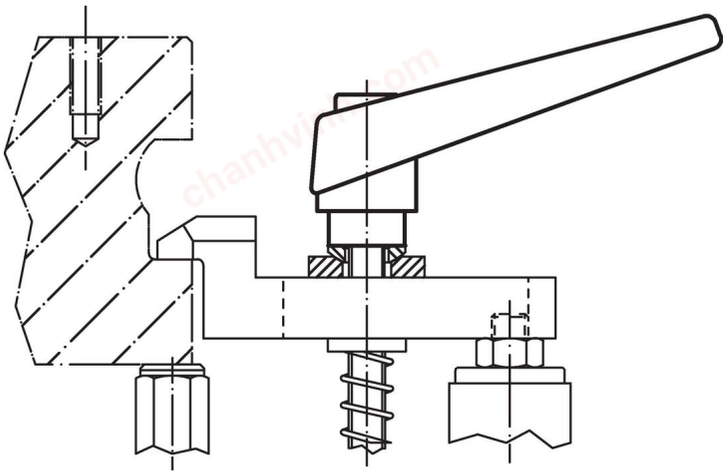

Compliance

For detailed compliance information please select the desired article number.