chanhvinh.com

Adjustable Clamping Levers • with female thread

EH 24400.



Product Description

Adjustable clamping levers find versatile applications when the area of use is confined or a specific lever position is required.

Material

Lever
- Zinc die-cast, plastic coated, orange similar to RAL 2004, matt structure
- Zinc die-cast, plastic coated, silver, similar to RAL 9006, matt structure
- Zinc die-cast, plastic coated, black, similar to RAL 9005, matt structure

Threaded part
- Steel, blackened, quality 5

Inner parts
- Steel, blackened, quality 5.8

Operation

By lifting the lever the serrations are disengaged. The lever can be positioned by the serrations. On releasing the lever, the serrations are automatically re-engaged.

More information

Notes

The threaded portion can be exchanged.

Drawing

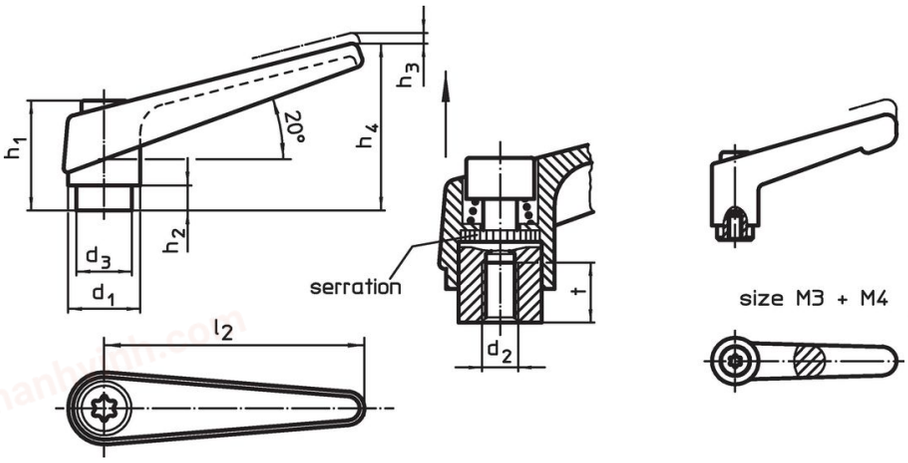

Order information

d1	d2	d3	h1	h2	h3	h4	l2	t ≥	[g]	Art. No.
				Dimensions [mm]						
orange										
13	**M 3**	10.0	24.5	4.0	3.5	30.5	30	7	26	24400.0032
13	**M 4**	10.0	24.5	4.0	3.5	30.5	30	9	25	24400.0036
14	**M 5**	10.0	24.5	4.0	3.0	35.0	45	8	33	24400.0111
14	**M 6**	10.0	24.5	4.0	3.0	35.0	45	8	33	24400.0121
18	**M 6**	13.5	31.0	6.5	3.0	45.0	62	10	71	24400.0311
18	**M 8**	13.5	31.0	6.5	3.0	45.0	62	10	72	24400.0321
22	**M 8**	16.0	36.0	8.0	3.5	52.0	74	14	112	24400.0411
22	**M10**	16.0	36.0	8.0	3.5	52.0	74	14	109	24400.0421
25	**M10**	19.0	43.0	11.0	4.0	63.0	89	17	176	24400.0511
25	**M12**	19.0	43.0	11.0	4.0	63.0	89	17	171	24400.0521
30	**M12**	23.0	50.5	12.0	5.0	76.0	108	22	286	24400.0611
30	**M16**	23.0	50.5	12.0	5.0	76.0	108	22	269	24400.0621
silver										
14	**M 5**	10.0	24.5	4.0	3.0	35.0	45	8	33	24400.0113
14	**M 6**	10.0	24.5	4.0	3.0	35.0	45	8	33	24400.0123
18	**M 6**	13.5	31.0	6.5	3.0	45.0	62	10	67	24400.0313
18	**M 8**	13.5	31.0	6.5	3.0	45.0	62	10	67	24400.0323
22	**M 8**	16.0	36.0	8.0	3.5	52.0	74	14	112	24400.0413

chanhvinh.com

Dimensions										Art. No.
d_1	d_2	d_3	h_1	h_2	h_3	h_4	l_2	t ≥		
				[mm]					[g]	
22	**M10**	16.0	36.0	8.0	3.5	52.0	74	14	109	24400.0423
25	**M10**	19.0	43.0	11.0	4.0	63.0	89	17	176	24400.0513
25	**M12**	19.0	43.0	11.0	4.0	63.0	89	17	171	24400.0523
30	**M12**	23.0	50.5	12.0	5.0	76.0	108	22	286	24400.0613
30	**M16**	23.0	50.5	12.0	5.0	76.0	108	22	269	24400.0623
black										
13	**M 3**	10.0	24.5	4.0	3.5	30.5	30	7	26	24400.0034
13	**M 4**	10.0	24.5	4.0	3.5	30.5	30	9	25	24400.0038
14	**M 5**	10.0	24.5	4.0	3.0	35.0	45	8	33	24400.0114
14	**M 6**	10.0	24.5	4.0	3.0	35.0	45	8	33	24400.0124
18	**M 6**	13.5	31.0	6.5	3.0	45.0	62	10	67	24400.0314
18	**M 8**	13.5	31.0	6.5	3.0	45.0	62	10	67	24400.0324
22	**M 8**	16.0	36.0	8.0	3.5	52.0	74	14	112	24400.0414
22	**M10**	16.0	36.0	8.0	3.5	52.0	74	14	109	24400.0424
25	**M10**	19.0	43.0	11.0	4.0	63.0	89	17	176	24400.0514
25	**M12**	19.0	43.0	11.0	4.0	63.0	89	17	168	24400.0524
30	**M12**	23.0	50.5	12.0	5.0	76.0	108	22	302	24400.0614
30	**M16**	23.0	50.5	12.0	5.0	76.0	108	22	269	24400.0624

Application example

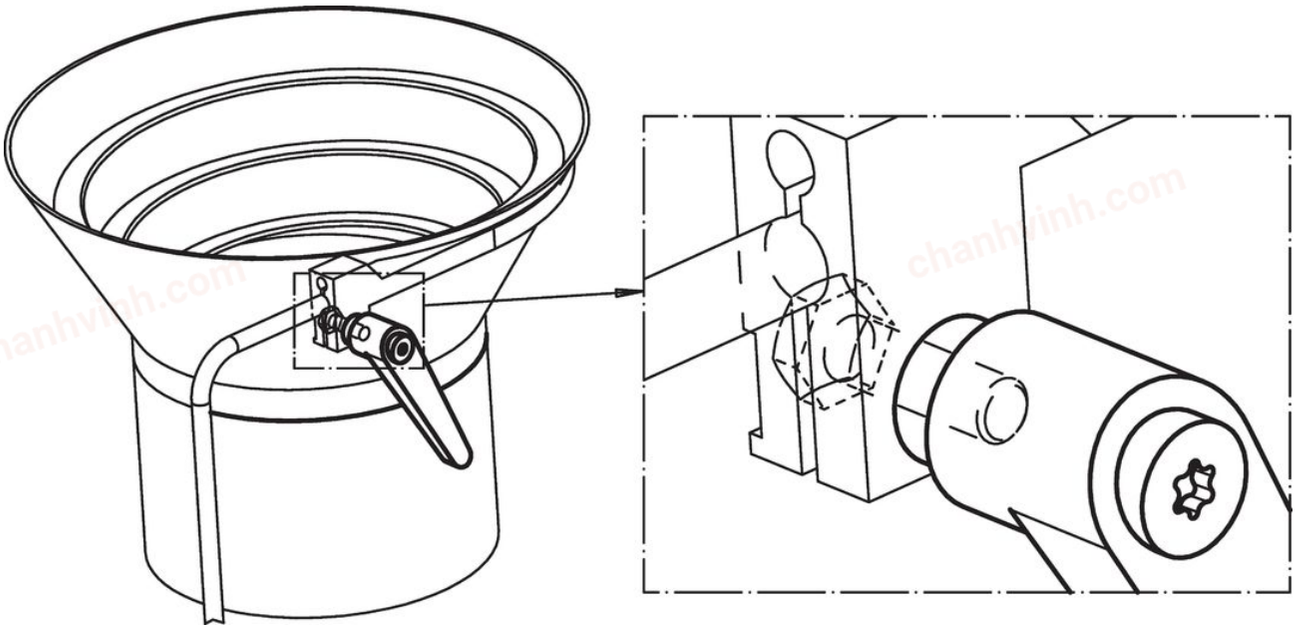

Compliance

For detailed compliance information please select the desired article number.