chanhvinh.com

Adjustable Clamping Levers • inner parts from stainless steel, with screw
EH 24390.



Product Description

Adjustable clamping levers with rust-proof inner parts. Suitable for multiple applications, e.g. medical environments, chemical industry, and so on.

Material

Lever
- Zinc die-cast, plastic coated, orange similar to RAL 2004, matt structure
- Zinc die-cast, plastic coated, black, similar to RAL 9005, matt structure

Inner parts
- Stainless steel 1.4305

Screw
- Stainless steel 1.4305

Operation

By lifting the lever the serrations are disengaged. The lever can be positioned by the serrations. On releasing the lever, the serrations are automatically re-engaged.

More information

Notes

The screw part can be exchanged.

Drawing

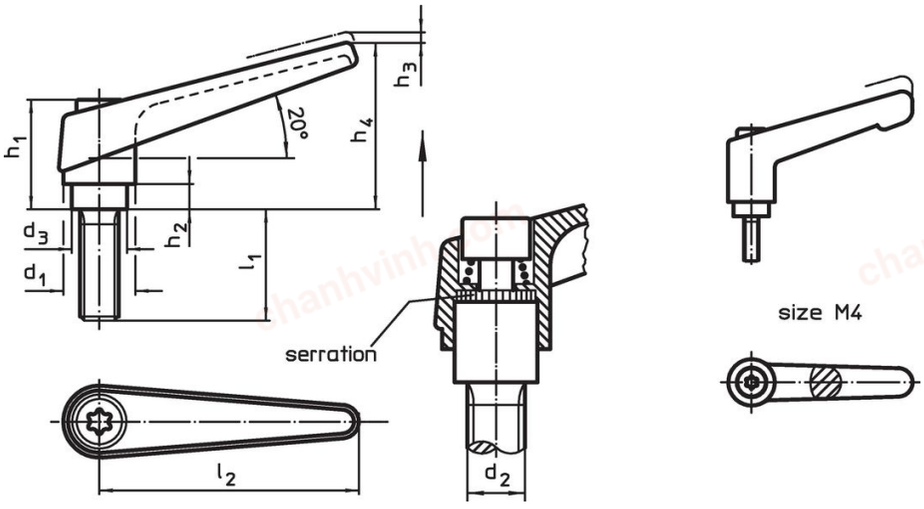

Order information

Dimensions										Art. No.
d_1	d_2	l_1	d_3	h_1	h_2	h_3	h_4	l_2	[g]	
				[mm]						
orange										
13	**M 4**	**12**	10.0	24.5	4.0	3.5	30.5	30	27.0	24390.0010
13	**M 4**	**16**	10.0	24.5	4.0	3.5	30.5	30	30.0	24390.0014
13	**M 4**	**20**	10.0	24.5	4.0	3.5	30.5	30	28.0	24390.0018
13	**M 4**	**25**	10.0	24.5	4.0	3.5	30.5	30	28.0	24390.0022
13	**M 4**	**32**	10.0	24.5	4.0	3.5	30.5	30	29.0	24390.0026
14	**M 5**	**12**	10.0	24.5	4.0	3.0	35.0	45	36.0	24390.0041
14	**M 5**	**16**	10.0	24.5	4.0	3.0	35.0	45	36.0	24390.0051
14	**M 5**	**20**	10.0	24.5	4.0	3.0	35.0	45	37.0	24390.0061
14	**M 5**	**25**	10.0	24.5	4.0	3.0	35.0	45	38.0	24390.0071
14	**M 5**	**32**	10.0	24.5	4.0	3.0	35.0	45	38.0	24390.0081
14	**M 5**	**40**	10.0	24.5	4.0	3.0	35.0	45	39.0	24390.0086
14	**M 6**	**12**	10.0	24.5	4.0	3.0	35.0	45	37.0	24390.0131
14	**M 6**	**16**	10.0	24.5	4.0	3.0	35.0	45	37.0	24390.0141
14	**M 6**	**20**	10.0	24.5	4.0	3.0	35.0	45	0.1	24390.0151
14	**M 6**	**25**	10.0	24.5	4.0	3.0	35.0	45	39.0	24390.0161
14	**M 6**	**32**	10.0	24.5	4.0	3.0	35.0	45	40.0	24390.0171
14	**M 6**	**40**	10.0	24.5	4.0	3.0	35.0	45	41.0	24390.0181
14	**M 6**	**50**	10.0	24.5	4.0	3.0	35.0	45	43.0	24390.0191
18	**M 8**	**16**	13.5	31.0	6.5	3.0	45.0	62	74.0	24390.0331

chanhvinh.com

Dimensions										Art. No.
d_1	d_2	l_1	d_3	h_1	h_2	h_3	h_4	l_2	[g]	
				[mm]						
18	**M 8**	**20**	13.5	31.0	6.5	3.0	45.0	62	76.0	24390.0341
18	**M 8**	**25**	13.5	31.0	6.5	3.0	45.0	62	77.0	24390.0351
18	**M 8**	**32**	13.5	31.0	6.5	3.0	45.0	62	79.0	24390.0361
18	**M 8**	**40**	13.5	31.0	6.5	3.0	45.0	62	81.0	24390.0371
18	**M 8**	**50**	13.5	31.0	6.5	3.0	45.0	62	84.0	24390.0381
18	**M 8**	**63**	13.5	31.0	6.5	3.0	45.0	62	89.0	24390.0391
22	**M10**	**20**	16.0	36.0	8.0	3.5	52.0	74	128.0	24390.0441
22	**M10**	**25**	16.0	36.0	8.0	3.5	52.0	74	130.0	24390.0451
22	**M10**	**32**	16.0	36.0	8.0	3.5	52.0	74	134.0	24390.0461
22	**M10**	**40**	16.0	36.0	8.0	3.5	52.0	74	138.0	24390.0471
22	**M10**	**50**	16.0	36.0	8.0	3.5	52.0	74	143.0	24390.0481
22	**M10**	**63**	16.0	36.0	8.0	3.5	52.0	74	148.0	24390.0486
22	**M10**	**80**	16.0	36.0	8.0	3.5	52.0	74	157.0	24390.0491
25	**M12**	**25**	19.0	43.0	11.0	4.0	63.0	89	205.0	24390.0541
25	**M12**	**32**	19.0	43.0	11.0	4.0	63.0	89	209.0	24390.0551
25	**M12**	**40**	19.0	43.0	11.0	4.0	63.0	89	215.0	24390.0561
25	**M12**	**50**	19.0	43.0	11.0	4.0	63.0	89	222.0	24390.0571
25	**M12**	**63**	19.0	43.0	11.0	4.0	63.0	89	232.0	24390.0581
25	**M12**	**80**	19.0	43.0	11.0	4.0	63.0	89	240.0	24390.0591
30	**M16**	**32**	23.0	50.5	12.0	5.0	76.0	108	348.0	24390.0641
30	**M16**	**40**	23.0	50.5	12.0	5.0	76.0	108	357.0	24390.0651
30	**M16**	**50**	23.0	50.5	12.0	5.0	76.0	108	370.0	24390.0661
30	**M16**	**63**	23.0	50.5	12.0	5.0	76.0	108	386.0	24390.0671
30	**M16**	**80**	23.0	50.5	12.0	5.0	76.0	108	407.0	24390.0681
black										
13	**M 4**	**12**	10.0	24.5	4.0	3.5	30.5	30	27.0	24390.0012
13	**M 4**	**16**	10.0	24.5	4.0	3.5	30.5	30	27.0	24390.0016
13	**M 4**	**20**	10.0	24.5	4.0	3.5	30.5	30	29.0	24390.0020
13	**M 4**	**25**	10.0	24.5	4.0	3.5	30.5	30	28.0	24390.0024
13	**M 4**	**32**	10.0	24.5	4.0	3.5	30.5	30	30.0	24390.0028
14	**M 5**	**12**	10.0	24.5	4.0	3.0	35.0	45	36.0	24390.0044
14	**M 5**	**16**	10.0	24.5	4.0	3.0	35.0	45	36.0	24390.0054
14	**M 5**	**20**	10.0	24.5	4.0	3.0	35.0	45	37.0	24390.0064
14	**M 5**	**25**	10.0	24.5	4.0	3.0	35.0	45	38.0	24390.0074
14	**M 5**	**32**	10.0	24.5	4.0	3.0	35.0	45	38.0	24390.0084
14	**M 5**	**40**	10.0	24.5	4.0	3.0	35.0	45	39.0	24390.0089
14	**M 6**	**12**	10.0	24.5	4.0	3.0	35.0	45	37.0	24390.0134
14	**M 6**	**16**	10.0	24.5	4.0	3.0	35.0	45	37.0	24390.0144
14	**M 6**	**20**	10.0	24.5	4.0	3.0	35.0	45	38.0	24390.0154
14	**M 6**	**25**	10.0	24.5	4.0	3.0	35.0	45	39.0	24390.0164
14	**M 6**	**32**	10.0	24.5	4.0	3.0	35.0	45	40.0	24390.0174
14	**M 6**	**40**	10.0	24.5	4.0	3.0	35.0	45	41.0	24390.0184
14	**M 6**	**50**	10.0	24.5	4.0	3.0	35.0	45	43.0	24390.0194
18	**M 8**	**16**	13.5	31.0	6.5	3.0	45.0	62	74.0	24390.0334
18	**M 8**	**20**	13.5	31.0	6.5	3.0	45.0	62	76.0	24390.0344
18	**M 8**	**25**	13.5	31.0	6.5	3.0	45.0	62	77.0	24390.0354
18	**M 8**	**32**	13.5	31.0	6.5	3.0	45.0	62	79.0	24390.0364
18	**M 8**	**40**	13.5	31.0	6.5	3.0	45.0	62	81.0	24390.0374
18	**M 8**	**50**	13.5	31.0	6.5	3.0	45.0	62	84.0	24390.0384
18	**M 8**	**63**	13.5	31.0	6.5	3.0	45.0	62	89.0	24390.0394
22	**M10**	**20**	16.0	36.0	8.0	3.5	52.0	74	128.0	24390.0444
22	**M10**	**25**	16.0	36.0	8.0	3.5	52.0	74	130.0	24390.0454
22	**M10**	**32**	16.0	36.0	8.0	3.5	52.0	74	134.0	24390.0464
22	**M10**	**40**	16.0	36.0	8.0	3.5	52.0	74	138.0	24390.0474
22	**M10**	**50**	16.0	36.0	8.0	3.5	52.0	74	143.0	24390.0484
22	**M10**	**63**	16.0	36.0	8.0	3.5	52.0	74	148.0	24390.0489
22	**M10**	**80**	16.0	36.0	8.0	3.5	52.0	74	157.0	24390.0494
25	**M12**	**25**	19.0	43.0	11.0	4.0	63.0	89	205.0	24390.0544
25	**M12**	**32**	19.0	43.0	11.0	4.0	63.0	89	209.0	24390.0554
25	**M12**	**40**	19.0	43.0	11.0	4.0	63.0	89	215.0	24390.0564
25	**M12**	**50**	19.0	43.0	11.0	4.0	63.0	89	222.0	24390.0574
25	**M12**	**63**	19.0	43.0	11.0	4.0	63.0	89	232.0	24390.0584

chanhvinh.com

Dimensions										Art. No.
d_1	d_2	l_1	d_3	h_1	h_2	h_3	h_4	l_2	[g]	
				[mm]						
25	**M12**	**80**	19.0	43.0	11.0	4.0	63.0	89	244.0	24390.0594
30	**M16**	**32**	23.0	50.5	12.0	5.0	76.0	108	348.0	24390.0644
30	**M16**	**40**	23.0	50.5	12.0	5.0	76.0	108	375.0	24390.0654
30	**M16**	**50**	23.0	50.5	12.0	5.0	76.0	108	370.0	24390.0664
30	**M16**	**63**	23.0	50.5	12.0	5.0	76.0	108	386.0	24390.0674
30	**M16**	**80**	23.0	50.5	12.0	5.0	76.0	108	407.0	24390.0684

Application example

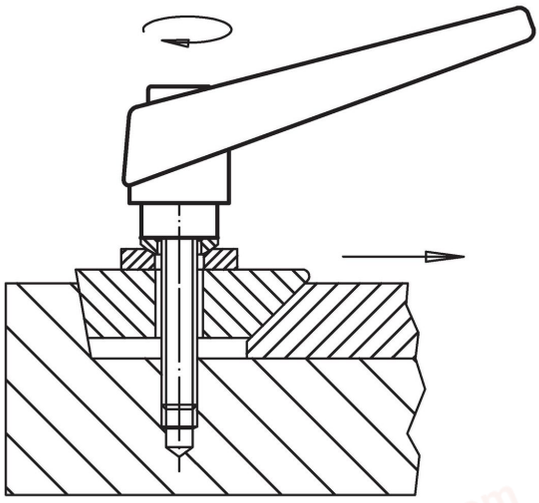

Compliance

For detailed compliance information please select the desired article number.